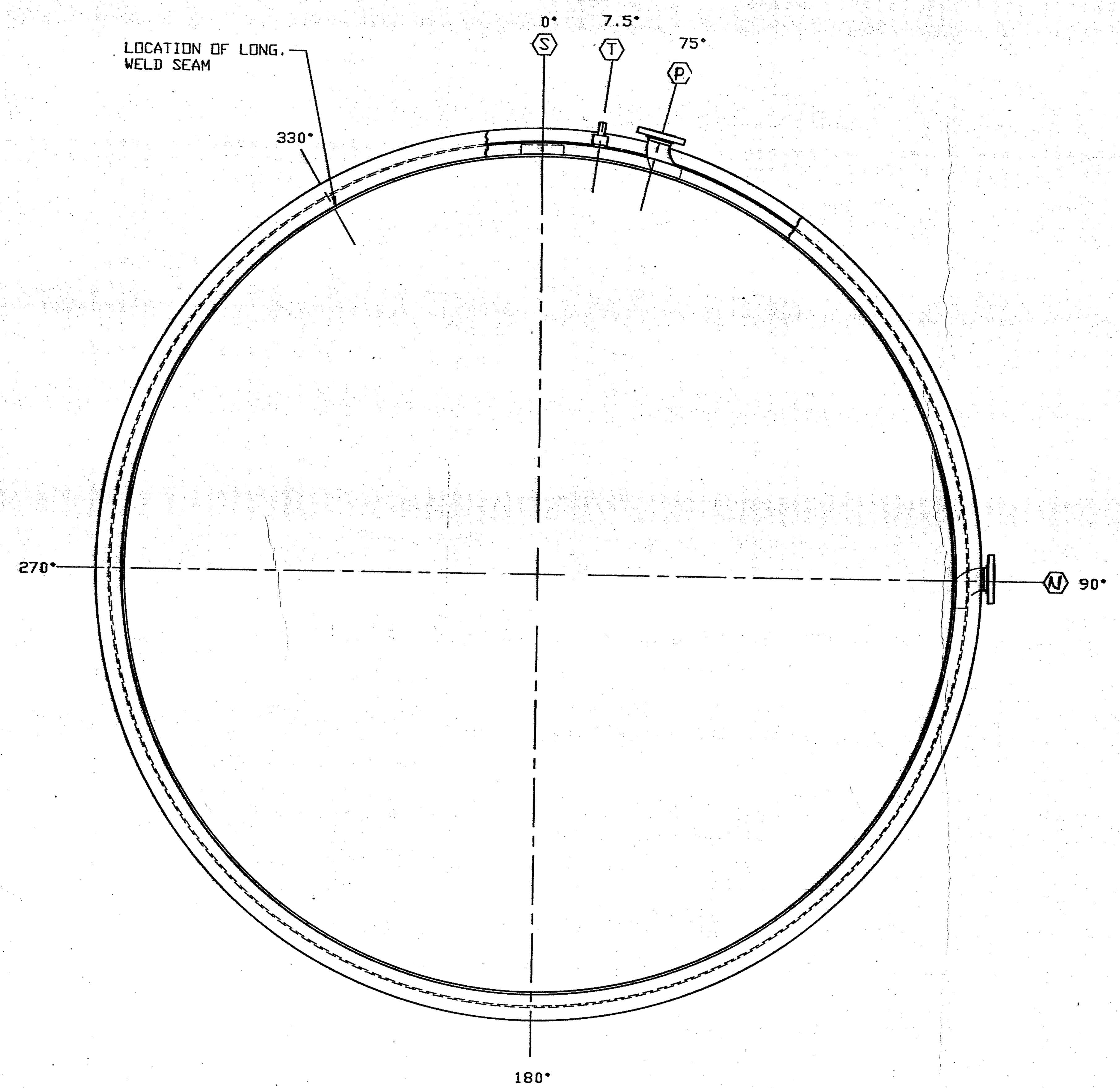

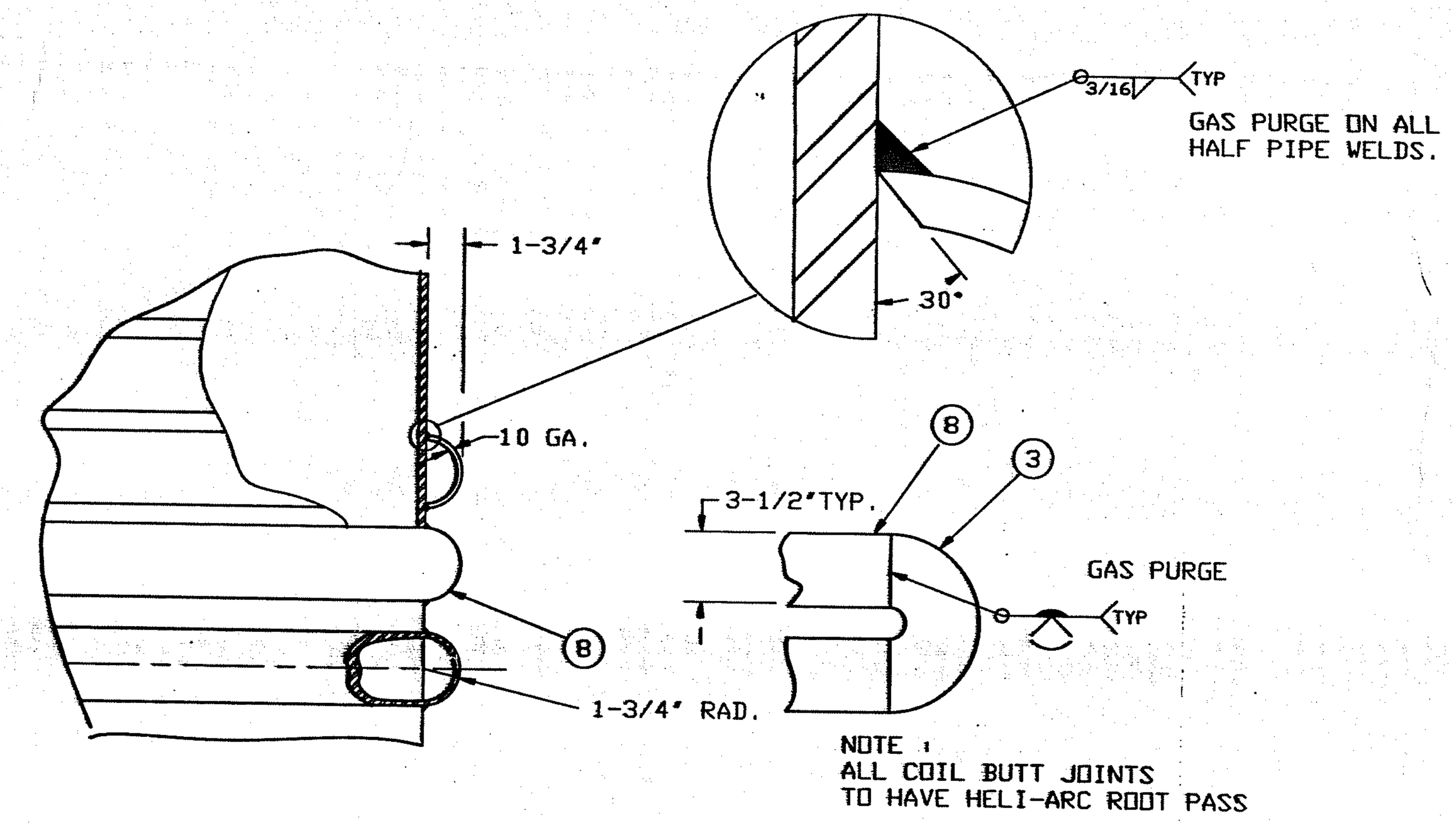

PIPE COIL DETAILS
SCALE : 2"=1'

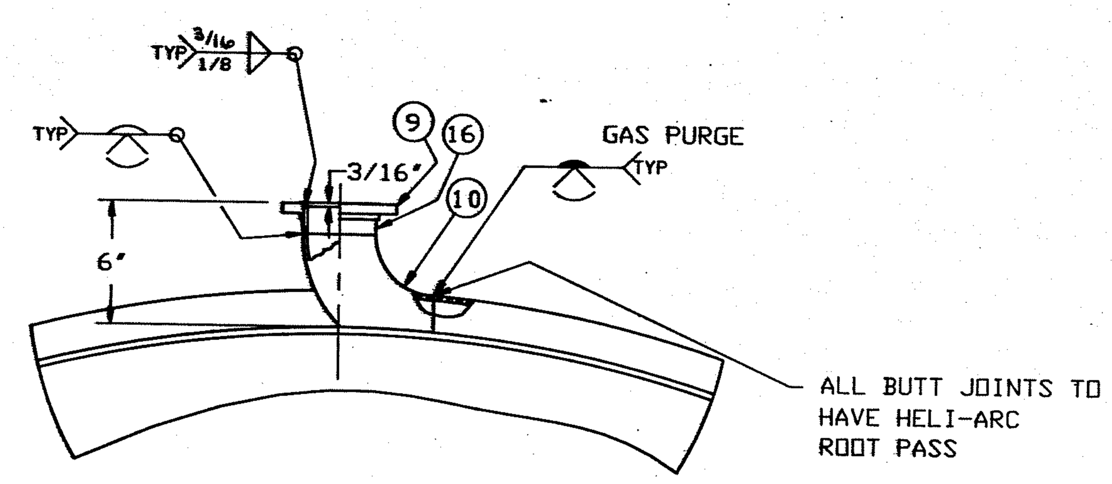

DETAIL NOZZ (N)(P)
SCALE : NONE

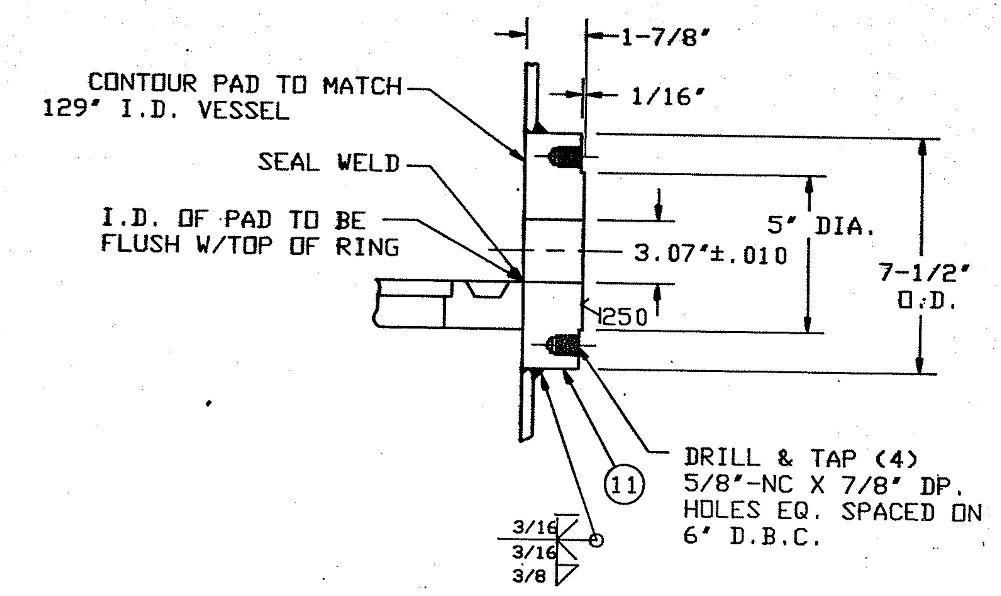

NOZZ (S) DETAIL
SCALE : NONE

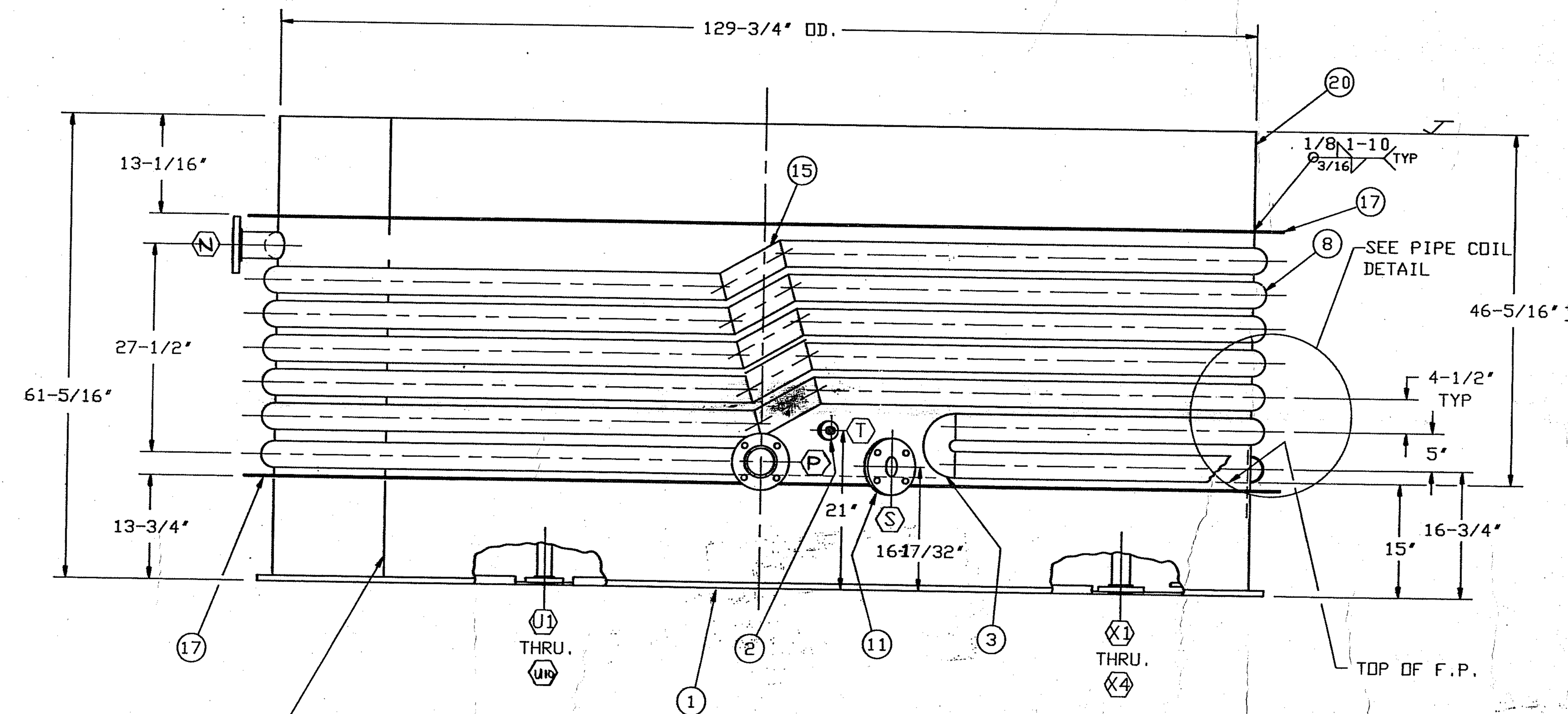

ELEVATION VIEW

NOTE:
SEE NOTE #7 DWG. E-3600589

NOTE:
GRIND THIS WELD FLUSH UNDER JKT.

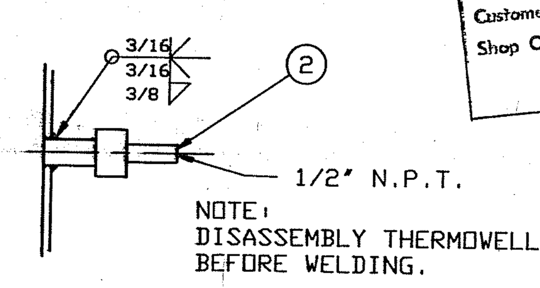

NOTE:
DISASSEMBLY THERMOWELL BEFORE WELDING.

THERMOWELL WELD DETAIL
SCALE = NONE

Paul J. Cahill
RECEIVED
MAY 2 1991

CERTIFIED PRINT
Clarence S. Farrell
Customer Order No. 90-00001
Shop Order No. 90-RF-171
ROSENMUND Charlotte, N. C. 4.26.91

CERTIFIED PRINT
Customer Order No.
Shop Order No.
GASTON COUNTY DYEING MACHINE CO. Stanley, N. C.
4/24/91

ASME CODE
REVIEWED 3/5/91 DATE
APPROVED DATE

CAD REFERENCE NO.
RD00151A

** .017 (4) PIECE CONSTRUCTION
** .008 129-7/8" I.D. W/30° BEVEL ON I.D. BOTH SIDES

ITEM NO	PART NO.	DRAWING NO.		MATERIAL OR DESCRIPTION	MATERIAL SPEC	MAT'L TYPE	QTY/PER	UM
020	9120026			PLATE,3/8 X 60-15/16 X 406-7/16 LG.	SA-248	T-304	1.9508	EA
019				SHELL ASSEMBLY 8m2 P/N 9126241				
018								
017	9127078		**	RING,137-3/4 OD +1/8-0 X 129-7/8 ID +0-1/8 X 1/4"	SA-240	304	2.	EA
016	5215000			PIPE,3 SCH 10S X 2-11/16" LG.	SA-312 304	/304L	.443	FT
015	5215000			PIPE,3 SCH 10S X 9-15/16" LG.	SA-312 304	/304L	4.162	FT
014				RINGS & PREP PARTS P/N 9126240				
013								
012								
011	9127080			RING,7-1/2 OD +1/16-0 X 2-5/8 ID +0-1/16 X 2	SA-240	304	1.	EA
010	0101384			PIPE ELB,WELD 3 SCH 10 ANSI	SA-403	T304L	2.	EA
009	0100508			FLANGE,RFSO 3 PS 150 LB ANSI	SA182B16.5	F304	2.	EA
008	9125202		**	HALF PIPE,3-1/2 OD X 10 GA (.134) X 7 TURNS @	SA-240	T304	1.	EA
007								
006								
004				SHELL ASSEMBLY 8m2 P/N 9126241				
005				RINGS & PREP PARTS P/N 9126240				
003	3616003	B-3616003		HALF PIPE,RETURN 180 DEG	SA-240	316L	1.	EA
002	3600511	E-3600511		THERMOWELL ASSY		B/M	1.	EA
001	3600592	E-3600592		BASE ASSY,8M2		B/M	1.	EA

BILL OF MATERIAL PART NUMBER: 3600590
* CUT LENGTH ON THIS B.O.M. FOR REFERENCE ONLY

REV.	DESCRIPTION	DATE	BY	CHECKED	APPROVED
G					
F					
E					
D					
C					
B					
A	INTERCHANGE LETTERS N+P	4-18-91		[illegible]	

NO.	QTY.	SIZE	RATING	TYPE	SCH.	SERVICE/DECRIPTION
X1-X4	4	2"	150#	RFSO	40	BASE-HEAT IN & OUT
U1-U10	10	1-1/2"	150#	RFSO	40	FILTRATE OUTLETS
T	1	1/2"	PAD	BAR		THERMOWELL
S	1	3"	150#	RFSO	40	SLURRY OUTLET
P	1	3"	150#	RFSO	40	JACKET OUTLET
N	1	3"	150#	RFSO	40	JACKET INLET

NOZZLE SCHEDULE

GASTON COUNTY FABRICATION
A DIVISION OF GASTON COUNTY DYEING MACHINE COMPANY
STANLEY, NORTH CAROLINA 704-263-4765

This shop drawing is the property of Gaston County Dyeing Machine Company and is not to be reused without written permission.

CUSTOMER ROSENMUND INC. CHARLOTTE, N.C. FOR SOFIX CORP.
TITLE BASE & SHELL ASSEMBLY 8m2 C-5100
CUSTOMER P.O. NO. 1747
CUSTOMER ITEM NO. C-5100
DRAWN BY G.M. DATE 1/21/91
CHECKED BY [illegible] DATE 1-28-91
SHOP ORDER NO. F-80816
NO. REQUIRED 1
SHEET 1 OF 1
SCALE 1" = 12"
No. E-3600590
REV. A

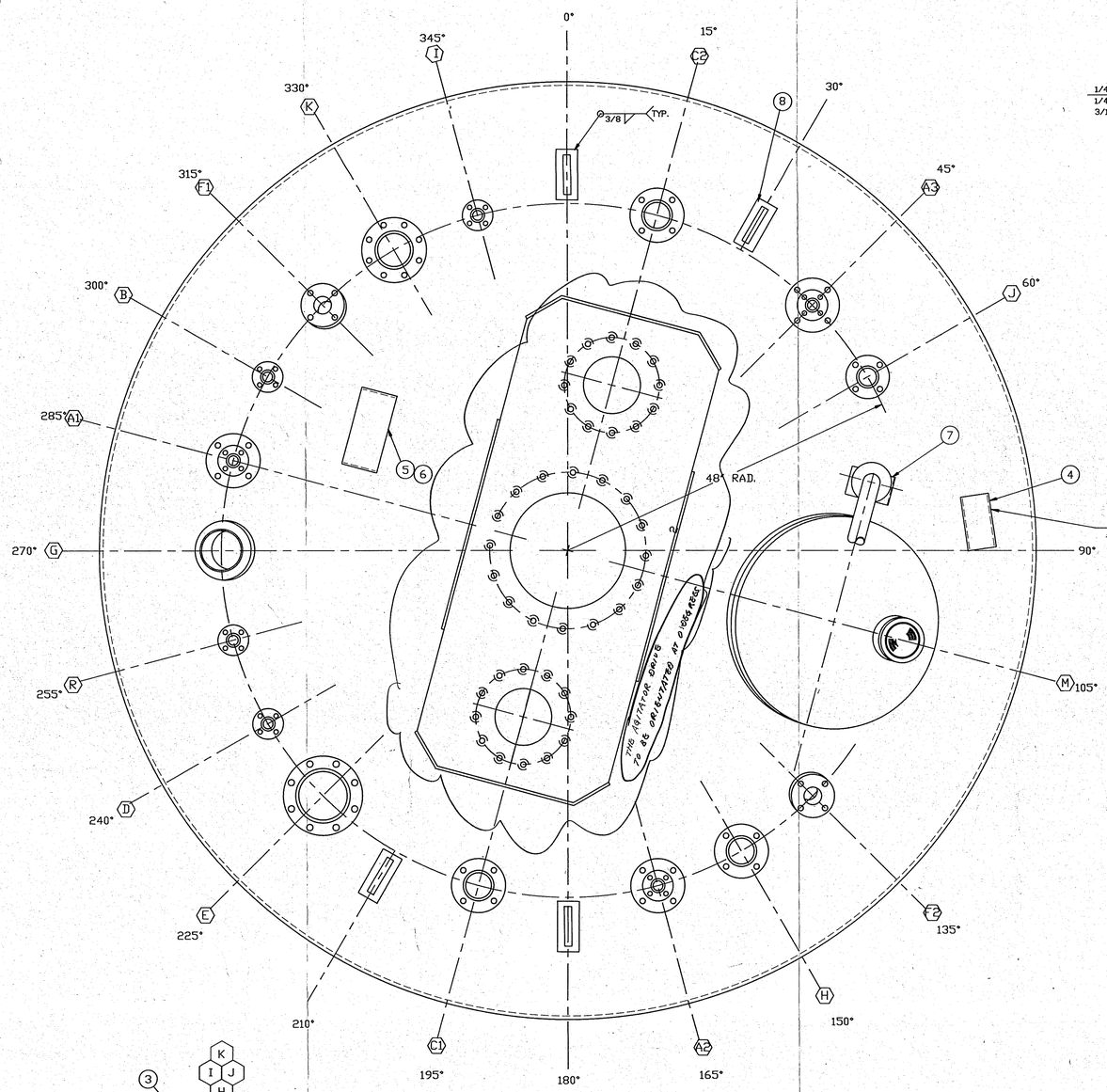

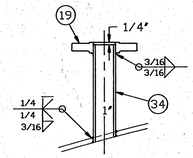

DETAIL : NOZZ"B" "D" "R"
SCALE:NONE

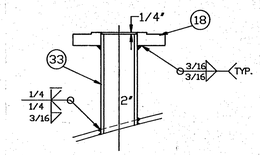

DETAIL : NOZZ"J" "I"
SCALE:NONE

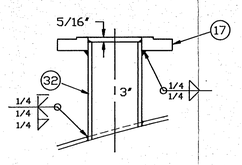

DETAIL : NOZZ "H"
SCALE:NONE

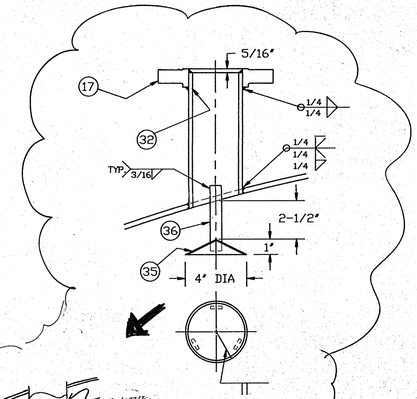

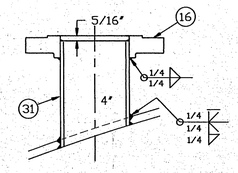

DETAIL : NOZZ"K"
SCALE:NONE

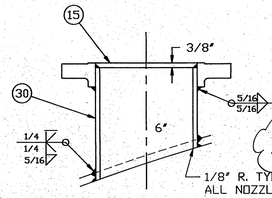

DETAIL : NOZZ"E"
SCALE:NONE

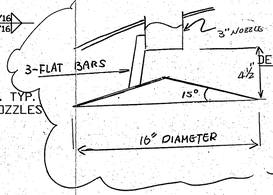

DETAIL : NOZZ"C1" & "C2"
SCALE:NONE

TO SEE ATTACHED COMMENT

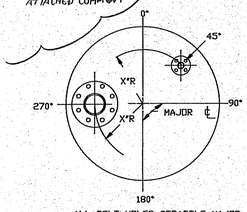

ALL BOLT HOLES STRADDLE MAJOR CENTER LINES UNLESS OTHERWISE SPECIFIED BY NOTE.

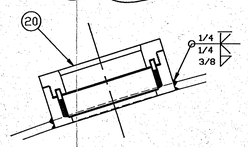

DETAIL : NOZZ"G
SCALE:NONE

DRILL & TAP 5/8"-NC X 3/4" DP (4) HOLES EQUALLY SPACED ON 4-3/4" D.B.C.

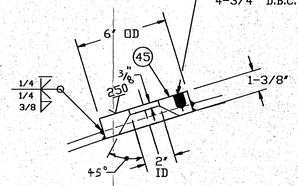

DETAIL : NOZZ"F1","F2"
SCALE:NONE

SIMONS-EASTERN CONSULTANTS, INC.
P.5262A
E-3600591 001 OF 001

SHINIZU AMERICA CORP.
SOFIX CORPORATION

RECEIVED 06FEB91	COPIES 3+1
P.O. 90-00001	FILE # 004
EQUIP. # C-5100	

REVIEWED
FOR GENERAL COMPLIANCE WITH THE DESIGN CONCEPT OF THE PROJECT AND CONTRACT DOCUMENTS. NO RESPONSIBILITY IS ASSUMED FOR CORRECTNESS OF DIMENSIONS OR DETAILS.
BY [signature] DATE 2/15/91

- [ ] NOT ACCEPTABLE-NOT RELEASED FOR PRODUCTION-REVISE AND RESUBMIT
- [x] SUBJECT TO REVISION (IF INDICATED) RELEASED FOR PRODUCTION-SUBMIT CERTIFIED DRAWINGS
- [ ] REVISION TAKEN - RELEASED FOR PRODUCTION - SUBMIT CERTIFIED DRAWINGS
- [ ] CERTIFIED DRAWING ACCEPTED - RELEASED FOR PRODUCTION
- [ ] NOT REQUIRED BY SIMONS FOR ENGINEERING DESIGN.

PRINT FOR APPROVAL
Customer Order No. 90-00001
Shop Order No. 90-RF-171
ROSENMUND
Charlotte, NC 2.1.91

GASTON COUNTY DYEING MACHINE COMPANY
CHECK PRINTS
[ ] NO CORRECTIONS NOTED
[ ] MAKE CORRECTIONS NOTED
[ ] REVISE AND RESUBMIT
GASTON COUNTY DYEING MACHINE COMPANY
CHECK PRINTS
BY
DATE
[ ] NO CORRECTIONS NOTED
[ ] MAKE CORRECTIONS NOTED
[ ] REVISE AND RESUBMIT
[ ] REJECTED - SEE REMARKS
BY
DATE

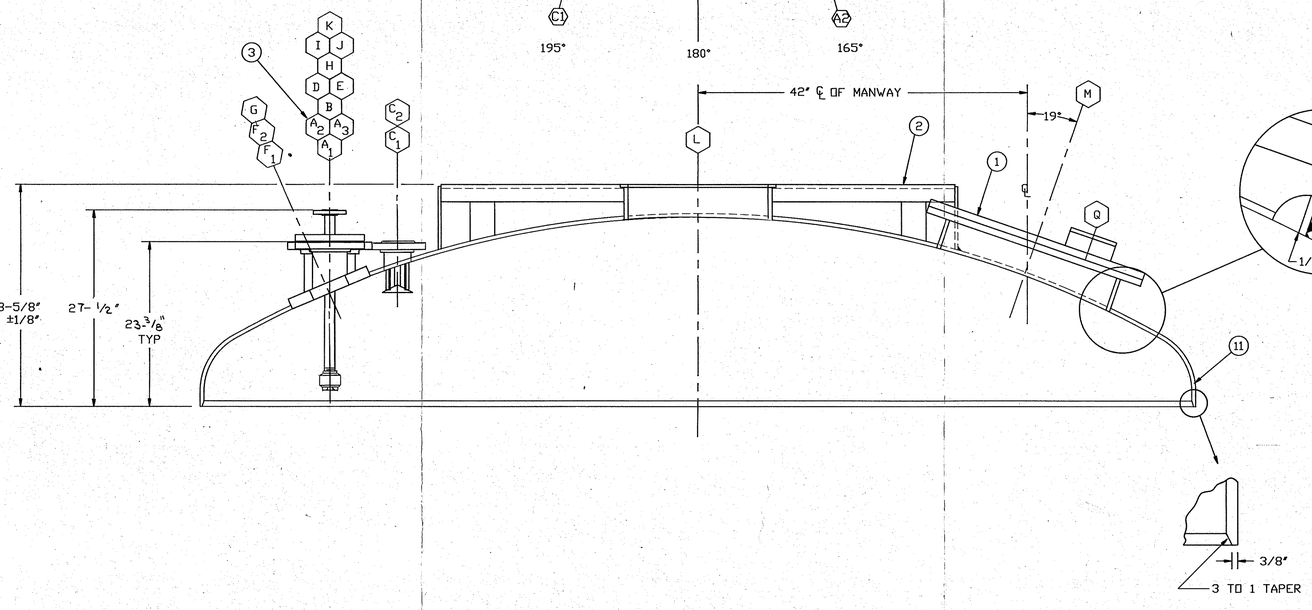

ASME CODE

REVIEWED	DATE
APPROVED	DATE

NO.	QTY.	SIZE	RATING	TYPE	SCH.	SERVICE/DECRIPTION
R	1	1"	150#	R.F.S.O.	40	HEADER VENT
Q	1	6"	—	—	—	MANWAY SIGHTGLASS
M	1	24-1/2"	50#	—	—	MANWAY
L	1	13-3/16"	—	PAD	—	AGITATOR
K	1	4"	150#	R.F.S.O.	40	SPARE
J	1	2"	150#	R.F.S.O.	40	STEAM
I	1	2"	150#	R.F.S.O.	40	WATER
H	1	3"	150#	R.F.S.O.	40	VENT
G	1	6"	150#	WELD/IN	—	SIGHTGLASS
F1-F2	2	2"	150#	PAD	—	LIGHT CONNECTION
E	1	6"	150#	R.F.S.O.	40	SAFETY RELIEF
D	1	1"	150#	R.F.S.O.	40	PRESSURE GAUGE
C1-C2	2	3"	150#	R.F.S.O.	40	PRODUCT INLET
B	1	1"	150#	R.F.S.O.	40	PRESSURIZATION
A1-A3	3	1" 3"	150#	R.F.S.O.	40	WASH-SPRAY BALL

NOZZLE SCHEDULE

** 20. PRESSURE PRODUCTS

ITEM NO	PART NO.	DRAWING NO.	MATERIAL OR DESCRIPTION	MATERIAL SPEC	MAT'L TYPE	QTY/PER	UM
53							
52							
51							
50							
49							
48							
47							
46							
45	9124947		RING,6" OD X 2" ID X 1-3/8" THK.	SA-240	304	2	EA
44			MACHINED ITEMS P/N # 912625 2				
43							
42							
41							
40							
39							
38							
37							
36	5073000		BAR,FL 3/16" THK X 3/4" X 4-1/4" LG.	SA-479	304	2.125	FT
35	6555017		SHEET, 11 GA. X 5-1/4" X 5-3/8" LG.	SA-240	304	0.009	EA
34	5228000		PIPE , 1" SCH. 40 X 8-7/16" LG.	SA-312	304/304L	1.407	FT
33	5231000		PIPE , 2" SCH. 40 X 8-5/8" LG.	SA-312	304/304L	1.437	FT
32	5233000		PIPE , 3" SCH. 40 X 8-7/8" LG.	SA-312	304/304L	2.219	FT
31	5235000		PIPE , 4" SCH. 40 X 9-1/8" LG.	SA-312	304/304L	.761	FT
30	5237000		PIPE , 6" SCH. 40 X 9-1/2" LG.	SA-312	304/304L	0.792	FT
29			PREP. PARTS P/N 912625 1				
28							
27							
26							
25							
24							
23							
22							
21							
20	9125190		SIGHTGLASS,6 150# @ 400°F, STYLE B WELD IN TYPE **	SA-240	304	1	EA
19	0100503		FLANGE , SLIP-ON 1" 150# R.F. ANSI	SA-182	304	3	EA
18	0100506		FLANGE , SLIP-ON 2" 150# R.F. ANSI	SA-182	304	2	EA
17	0100508		FLANGE , SLIP-ON 3" 150# R.F. ANSI	SA-182	304	3	EA
16	0100510		FLANGE , SLIP-ON 4" 150# R.F. ANSI	SA-182	304	1	EA
15	0100512		FLANGE , SLIP-ON 6" 150# R.F. ANSI	SA-182	304	1	EA
14							
13							
12							
11	9125191		HEAD,ASME F&D 129-3/4"OD X 123"DR X 1/2"THK. X 2"SF	SA-240	304	1	EA
10	912625 1		PREP. PARTS		B/M		
9	912625 2		MACHINED PARTS		B/M		
8		B-1400066	LIFTING LUG		B/M	3	EA
7		E-3600600	MANWAY DAVIT ASSEMBLY		B/M	1	EA
6		B-3600467	MANIFOLD BRACKET		B/M	1	EA
5		B-3600466	DISCHARGE MANIFOLD BRACKET		B/M	1	EA
4		B-3600465	CONTROLL UNIT BRACKET		B/M	1	EA
3		E-3600422	SPRAY BALL ASSEMBLY		B/M	3	EA
2		E-3600597	AGITATOR PLATE ASSEMBLY		B/M	1	EA
1		E-3600598	MANWAY ASSEMBLY 24-1/2" ID		B/M	1	EA

BILL OF MATERIAL PART NUMBER: 3600591 — * CUT LENGTH ON THIS B.O.M. FOR REFERENCE ONLY

REV.	DESCRIPTION	DATE	BY	CHECKED	APPROVED
G					
F					
E					
D					
C					
B					
A					

RETURN TO VENDOR

GASTON COUNTY FABRICATION
A DIVISION OF GASTON COUNTY DYEING MACHINE COMPANY
STANLEY, NORTH CAROLINA 704 263-4765

This shop drawing is the property of Gaston County Dyeing Machine Company and is not to be reused without written permission.

CUSTOMER ROSENMUND INC. CHARLOTTE, N.C. FOR SOFIX CORP.
TITLE HEAD ASSEMBLY 8M2
CUSTOMER P.O. NO. 90-00001 | CUSTOMER ITEM NO. C-5100
DRAWN BY G.M. DATE 1/17/91 | CHECKED BY [signature] DATE 1-29-91
SHOP ORDER NO. F-80816A | NO. REQUIRED 1 | SHEET 1 OF 1
SCALE 1-1/2=12 | No. E-3600591 | REV.

CAD REFERENCE NO. RD00144A

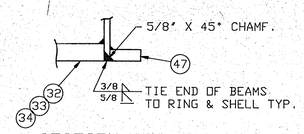

SECTION "C"-"C"
N.T.S.

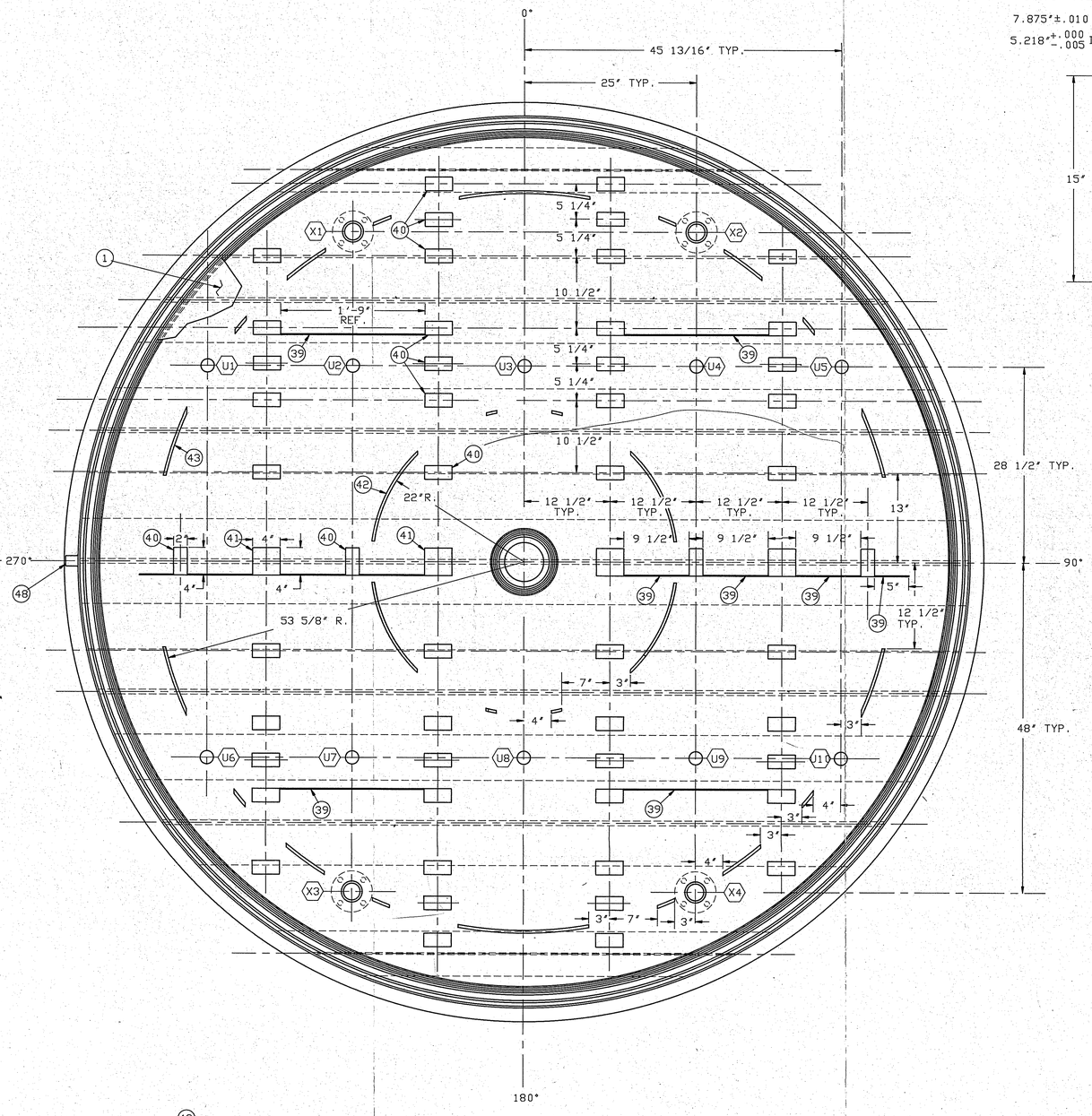

PLAN VIEW
1/8"=1'

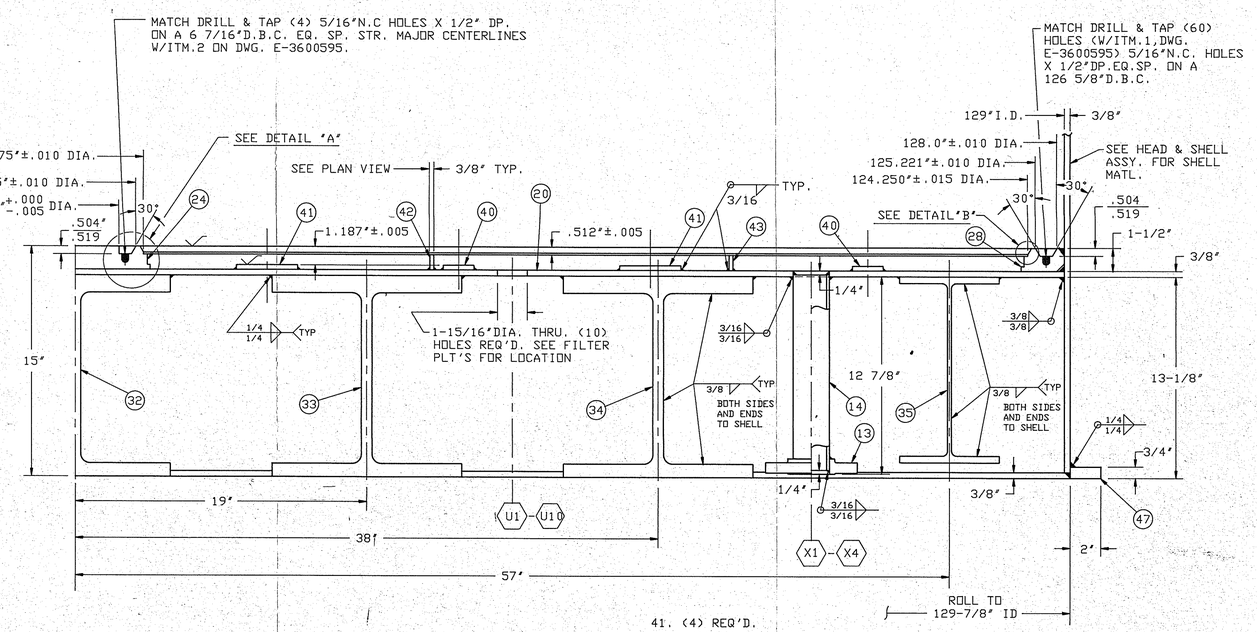

BED SECTION DETAIL
1/4"= 1'

41. (4) REQ'D.
40. (52) REQ'D.
(**)28. +0 -3/16 X 1 3/4"THK.

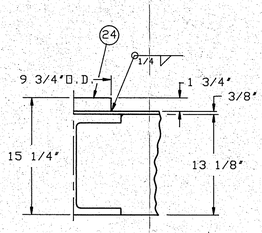

INNER RING ROUGH MACH'G. DETAIL

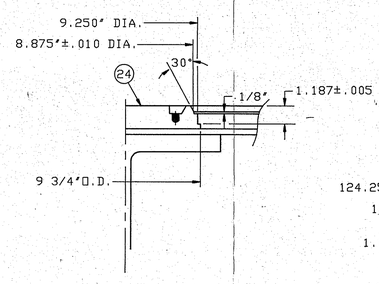

DETAIL "A"

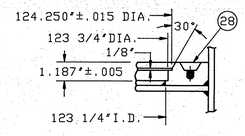

DETAIL "B"

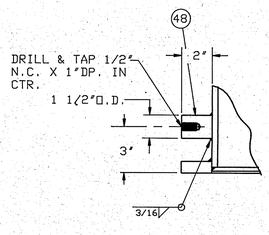

GROUNDING LUG DETAIL
N.T.S.

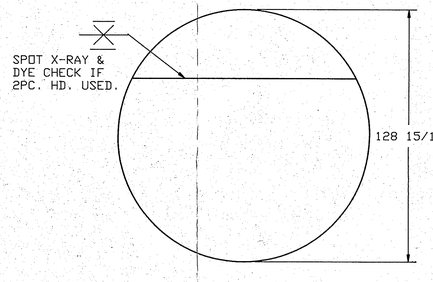

⑳ FLAT HEAD DETAIL
N.T.S.

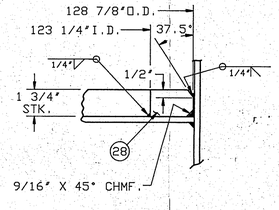

OUTER RING ROUGH MACH'G. DETAIL

ASME CODE		
CODE SPEC		DATE
REV	DATE	APP.

SIMONS-EASTERN CONSULTANTS, INC.
P.5262A
E-3600592 001 OF 001
SHIMIZU AMERICA CORP.
SOFIX CORPORATION
RECEIVED 06FEB91 | COPIES 3+1
P.O. 90-00001 | FILE # 005
EQUIP # C-5100
REVIEWED
FOR GENERAL COMPLIANCE WITH THE DESIGN CONCEPT OF THE PROJECT AND CONTRACT DOCUMENTS. NO RESPONSIBILITY IS ASSUMED FOR CORRECTNESS OF DIMENSIONS OR DETAILS.
BY [illegible] DATE 2/12/91
☐ NOT ACCEPTABLE-NOT RELEASED FOR PRODUCTION-REVISE AND RESUBMIT
☐ SUBJECT TO REVISION AS INDICATED, RELEASED FOR PRODUCTION-SUBMIT CERTIFIED DRAWINGS.
☒ NO EXCEPTION TAKEN - RELEASED FOR PRODUCTION - SUBMIT CERTIFIED DRAWINGS
☐ CERTIFIED DRAWING ACCEPTED - RELEASED FOR PRODUCTION
☐ NOT REQUIRED BY SIMONS FOR ENGINEERING DESIGN

GASTON COUNTY DYEING MACHINE CO.
CHECK PRINTS
[ ] NO CORRECTIONS NOTED
[ ] MAKE CORRECTIONS NOTED
[ ] REVISE AND RESUBMIT
[ ] REJECTED-SEE REMARKS
BY
DATE

PRINT FOR APPROVAL
Clarence S. Carrell
Customer Order No. 90-00001
Shop Order No. 90-EF-171
ROSENMUND Charlotte, NC 2-1-91

ITEM NO.	PART NO.	DRAWING NO.	MATERIAL OR DESCRIPTION	MAT'L SPEC	MAT'L TYPE	QTY/PER	UM
055							
054							
053							
052							
051							
050							
049							
048	5117000		BAR,RND. 1 1/2" O.D. X 2" LG.	SA-479	304	.167	
047	5042000		BAR,FL. 3/4" X 2" X 34'-6 5/16" LG.	SA-479	304	36.0	
046			PREP. PARTS - P.N.9126247				
045							
044							
043	5019000		BAR,FL. 3/8" X 1 1/2" X 28'-2 1/16" LG.	SA-479	304	30.0	
042	5019000		BAR,FL. 3/8" X 1 1/2" X 11'-7 3/8" LG.	SA-479	304	12.0	
041	6555038		PLATE,1/2" THK. X 4" X 4" LG. (**)	SA-240	304	.0028	
040	6555038		PLATE,1/2" THK. X 2" X 4" LG. (**)	SA-240	304	.0181	
039	6555017		SHEET,11 GA. X 15/16" X 14'-0" LG. (APPROX.)	SA-240	304	.023	
038			BAFFLES & BLOCKS - P.N. 9126246				
037							
036							
035	9101831		BEAM,I 12" X 31.8 LB./FT. X 71 3/4" LG.	SA-36	C.S.	2	
034	9125193		BEAM,12" W F 120 LB. X 112 1/2" LG.	SA-36	C.S.	2	
033	9125192		BEAM,12" W F 120 LB. X 126 3/8" LG.	SA-36	C.S.	2	
032	9125192		BEAM,12" W F 120 LB. X 129" LG.	SA-36	C.S.	1	
031			SUPPORT BEAMS - P.N. 9126245				
030							
029							
028	9124949		RING,129"O.D.+3/16 -0 X 123 1/4"I.D. (**)	SA-240	304	1	
027			OUTER SUPPORT RING - P.N. 9126244				
026							
025							
024	9127079		DISC,9 3/4"O.D.+1/16 -0 X 1 3/4" THK.	SA-240	304	1	
023			CENTER DISC - P.N. 9126243				
022							
021							
020	9125194		DISC,129"O.D.+1/8 -0 X 3/8" THK.	SA-240	304	1	
019			FLAT HEAD - P.N. 9126242				
018							
017							
016							
015							
014	5231000		PIPE,2" SCH. 40 X 12 7/8" LG.	SA-312	304/304L	.3000	
013	0100506		FLANGE,R.F.S.O. 2"-150# ANSI	SA-182	304	4	
012							
011							
010							
009							
008							
007			PREP. PARTS - P.N. 9126247				
006			BAFFLES & BLOCKS - P.N. 9126246				
005			SUPPORT BEAMS - P.N. 9126245				
004			OUTER SUPPORT RING - P.N. 9126244				
003			CENTER DISC - P.N. 9126243				
002			FLAT HEAD - P.N. 9126242				
001	3600593	E-3600593	FILTER PLATE ASSY.	B/M	304	1	

BILL OF MATERIAL PART NUMBER

* CUT LENGTH ON THIS B.O.M. FOR REFERENCE ONLY

REV.	DESCRIPTION	DATE	BY	CHECKED	APPROVED
G					
F					
E					
D					
C	RETURN TO VENDOR				
B					
A					

GASTON COUNTY FABRICATION
A DIVISION OF GASTON COUNTY DYEING MACHINE COMPANY
STANLEY, NORTH CAROLINA 704 263-4765

This shop drawing is the property of Gaston County Dyeing Machine Company and is not to be reused without written permission.

CUSTOMER ROSENMUND INC. CHARLOTTE,N.C. FOR SOFIX CORP.
TITLE SM2 BASE ASSY.,SIMPLE HEATED F.P.
CUSTOMER P.O. NO. 1747 | CUSTOMER ITEM NO. C5100
DRAWN BY M.K.M. | DATE 1-21-91 | CHECKED BY [illegible] | DATE 1/11/91
SHOP ORDER NO. F-80816A | NO. REQUIRED 1 | SHEET 1 OF 1
SCALE 1/8"=1' | No. E-3600592 | REV.

REFERENCE NO. 00147A

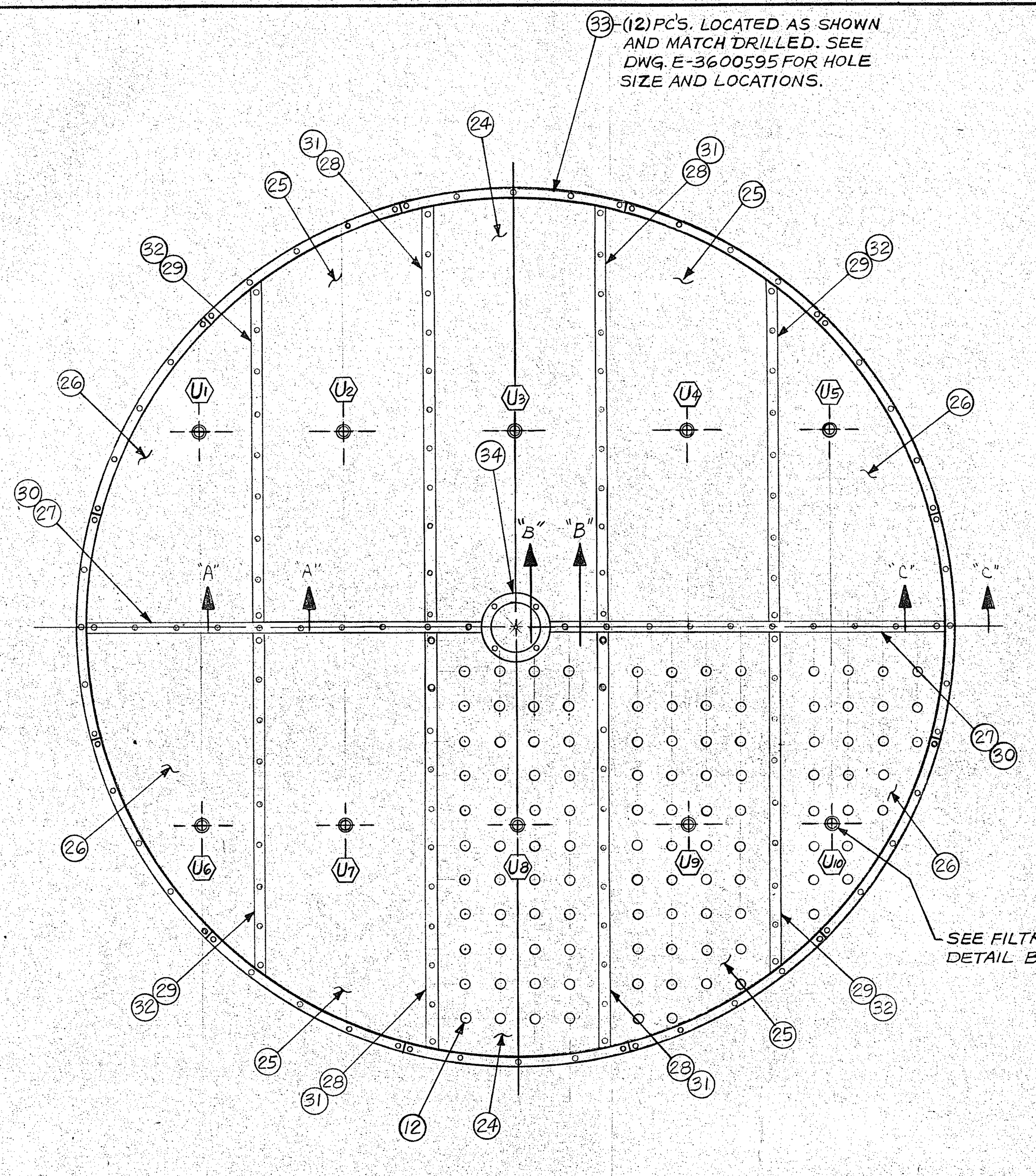

FILTER PLATE LOCATIONS
N.T.S.

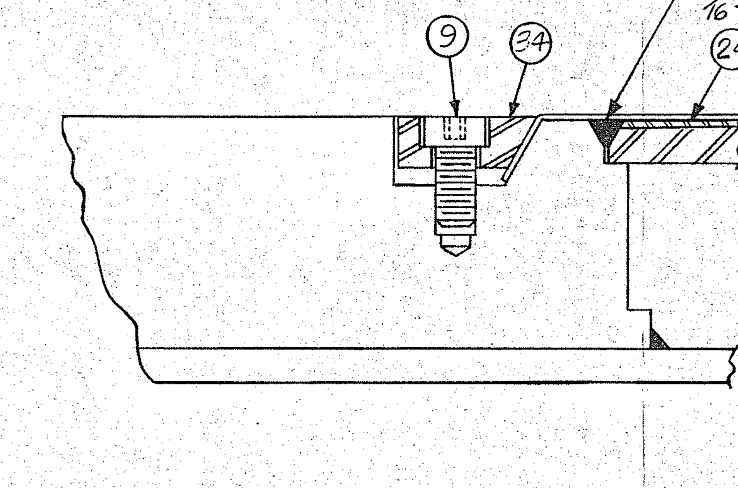

SECTION "B-B"
N.T.S.

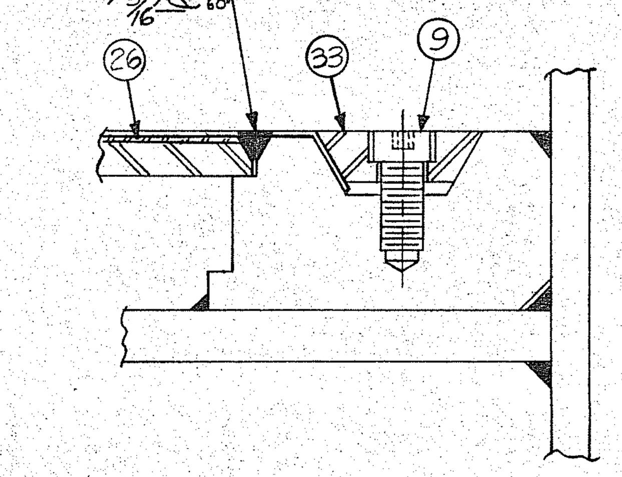

SECTION "C-C"
N.T.S.

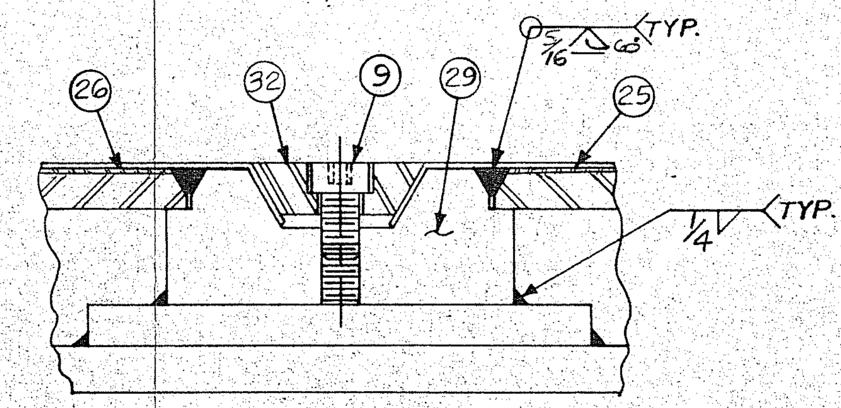

SECTION "A-A"
N.T.S.

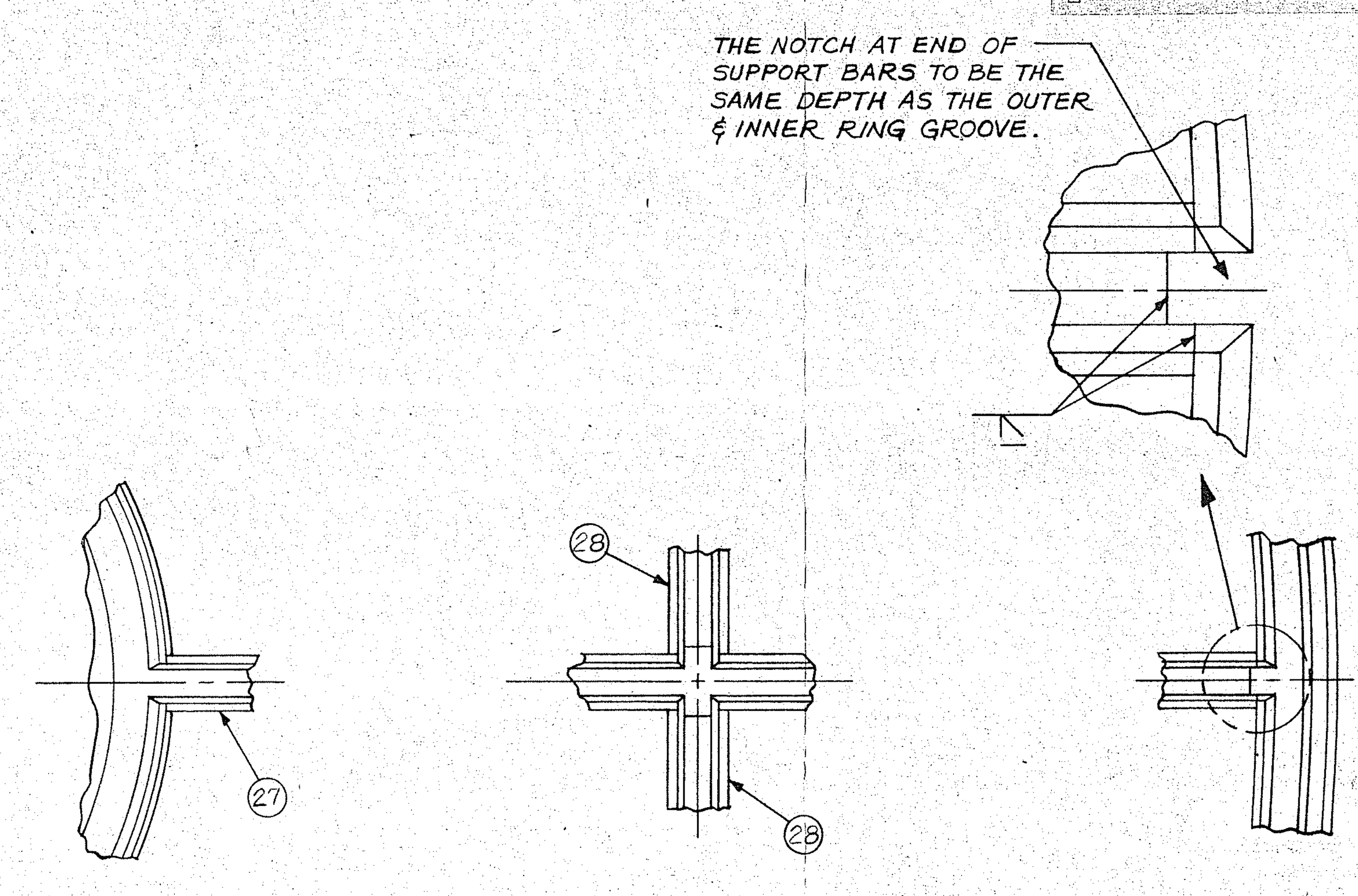

BOTTOM FILTER SUPPORT
N.T.S.

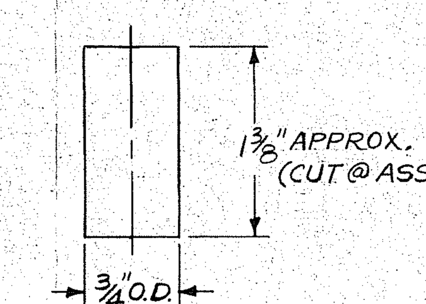

(12) STAY BAR - (348) REQ'D.
1" = 1"

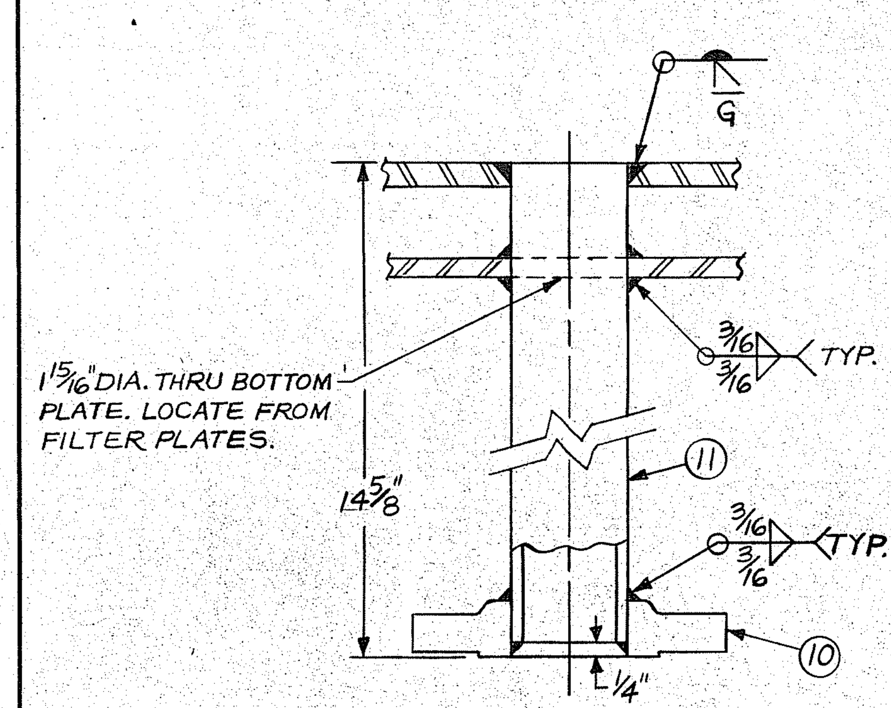

(U1) THRU (U10) FILTRATE OUTLET
1/2" = 1"

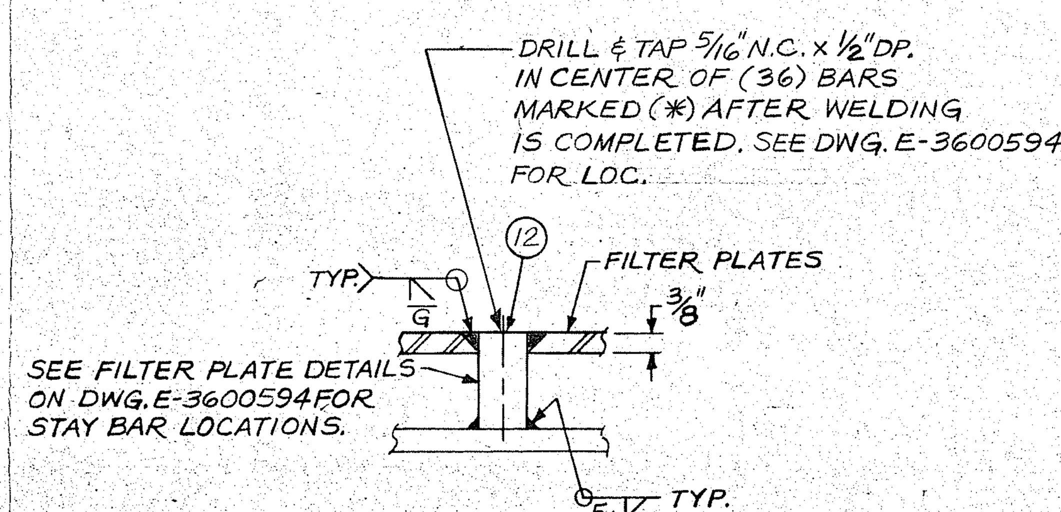

STAY BAR WELD DETAIL
1/2" = 1"

SIMONS-EASTERN CONSULTANTS, INC.
P.5262A
E-3600593 001 OF 001
SHIMIZU AMERICA CORP.
SOFIX CORPORATION
RECEIVED 06FEB91 | COPIES 3+1
P.O. 90-00001 | FILE # 006
EQUIP. # C-5100
REVIEWED
FOR GENERAL COMPLIANCE WITH THE DESIGN CONCEPT OF THE PROJECT AND CONTRACT DOCUMENTS. NO RESPONSIBILITY IS ASSUMED FOR CORRECTNESS OF DIMENSIONS OR DETAILS.
BY [signature] DATE 2/15/91
☐ NOT ACCEPTABLE-NOT RELEASED FOR PRODUCTION-REVISE AND RESUBMIT.
☐ SUBJECT TO REVISION AS INDICATED, RELEASED FOR PRODUCTION-SUBMIT CERTIFIED DRAWINGS.
☒ NO EXCEPTION TAKEN - RELEASED FOR PRODUCTION - SUBMIT CERTIFIED DRAWING.
☐ CERTIFIED DRAWING ACCEPTED - RELEASED FOR PRODUCTION.
☐ NOT REQUIRED BY SIMONS FOR ENGINEERING DESIGN.

GASTON COUNTY DYEING MACHINE COMPANY
CHECK...
☐ NO CORRECTIONS NOTED
☐ MAKE CORRECTIONS NOTED
☐ REVISE AND RESUBMIT
☐ REJECTED-SEE REMARKS
BY
DATE

PRINT FOR APPROVAL
Clarence S. Darnell
Customer Order No. 90-00001
Shop Order No. 90-FF-171
ROSENMUND Charlotte, NC 2.1.91

ITEM NO.	QTY.	DESCRIPTION	MATERIAL	G.C. PART NO.	DRAWING NO.	QTY./PER.
60						
59						
58						
57						
56						
55						
54						
53						
52						
51						
50						
49						
48						
47						
46						
45						
44						
43						
42						
41						
40						
39						
38						
37						
36						
35						
34	1	INNER TIGHTENING RING	SA-240-304		E-3600595	1
33	1	OUTER TIGHTENING RING	SA-240-304		E-3600595	1
32	4	END FILTER SCREEN CLAMP	SA-240-304		E-3600596	4
31	4	MIDDLE FILTER SCREEN CLAMP	SA-240-304		E-3600596	4
30	2	CENTER FILTER SCREEN CLAMP	SA-240-304		E-3600596	2
29	4	END FILTER SUPPORT BAR	SA-240-304		E-3600596	4
28	4	MIDDLE FILTER SUPPORT BAR	SA-240-304		E-3600596	4
27	2	CENTER FILTER SUPPORT BAR	SA-240-304		E-3600596	2
26	4	END FILTER PLATE	SA-240-304		E-3600594	4
25	4	MIDDLE FILTER PLATE	SA-240-304		E-3600594	4
24	2	CENTER FILTER PLATE	SA-240-304		E-3600594	2
23		(ITEMS ABOVE FOR DWG. REF. ONLY)				
22						
21						
20						
19						
18						
17						
16						
15						
14						
13						
12	348	BAR, RND. 3/4" O.D. X 13/8" LG.	SA-479-304	5108000		42.000
11	10	PIPE, 1 1/2" SCH. 40 X 14 1/2" LG.	SA-312-304/304L	5230000		13.000
10	10	FLANGE, R.F.S.O. 1 1/2" 150# ANSI	SA-182-304	0100505		10
9	164	CAP SCREW, HEX SOC. HD. 5/16" N.C. X 5/8" LG.	316	9106078		170
8						
7						
6						
5						
4						
3		FILTER PLATE RINGS		3600595	E-3600595	
2		SUPPORT & CLAMP BARS		3600596	E-3600596	
1		FILTER PLATE DETAILS		3600594	E-3600594	

BILL OF MATERIAL P/N 3600593

REV.	DESCRIPTION	DATE	BY	CHECKED	APPROVED
G					
F					
E					
D					
C					
B					
A					

RETURN TO VENDOR

NO.	QTY.	SIZE	RATING	TYPE	SCH.	SERVICE/DESCRIPTION

NOZZLE SCHEDULE

GASTON COUNTY FABRICATION
A DIVISION OF GASTON COUNTY DYEING MACHINE COMPANY
STANLEY, NORTH CAROLINA 704-263-4765

This shop drawing is the property of Gaston County Dyeing Machine Company and is not to be reused without written permission.

CUSTOMER ROSENMUND INC., CHARLOTTE, N.C. FOR SOFIX
TITLE SIMPLE HEATED FILTER PLATE ASSY.
CUSTOMER P.O. NO. 1747 | CUSTOMER ITEM NO. C5100
DRAWN BY M. McINTOSH DATE 1-9-91 | CHECKED BY [signature] DATE 1/28/91
SHOP ORDER NO. F-80816A | NO. REQUIRED | SHEET 1 OF 1
SCALE NOTED | No. E-3600593 | REV.

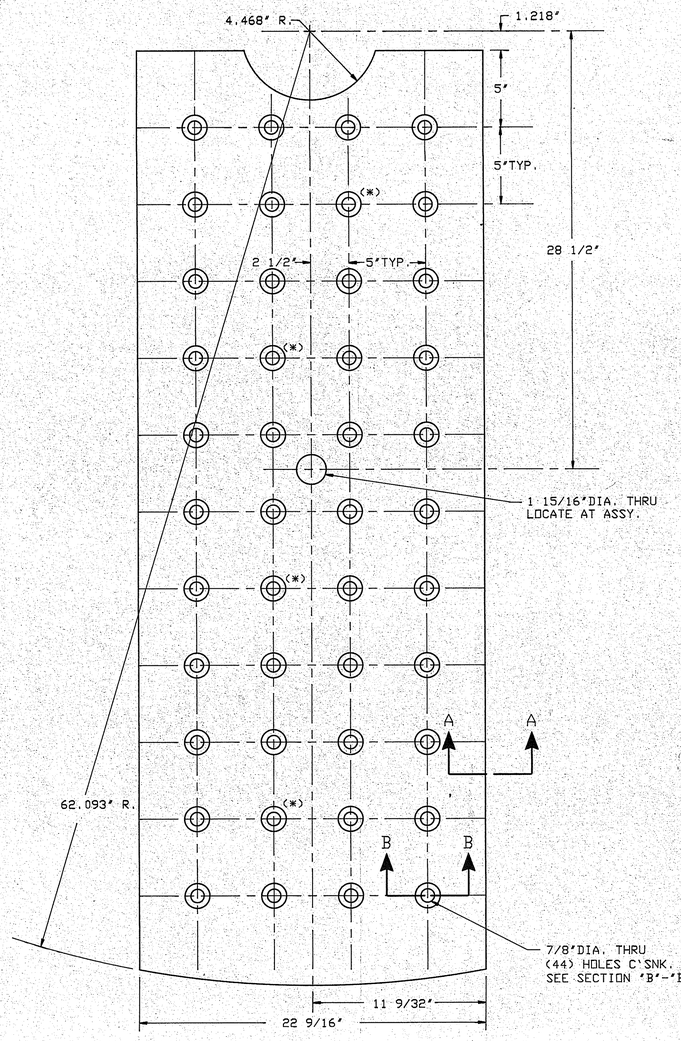

1 CENTER FILTER PLATE

SCALE-3"=1'

(1)REQ'D. AS SHOWN
(1)REQ'D. OPPOSITE HAND

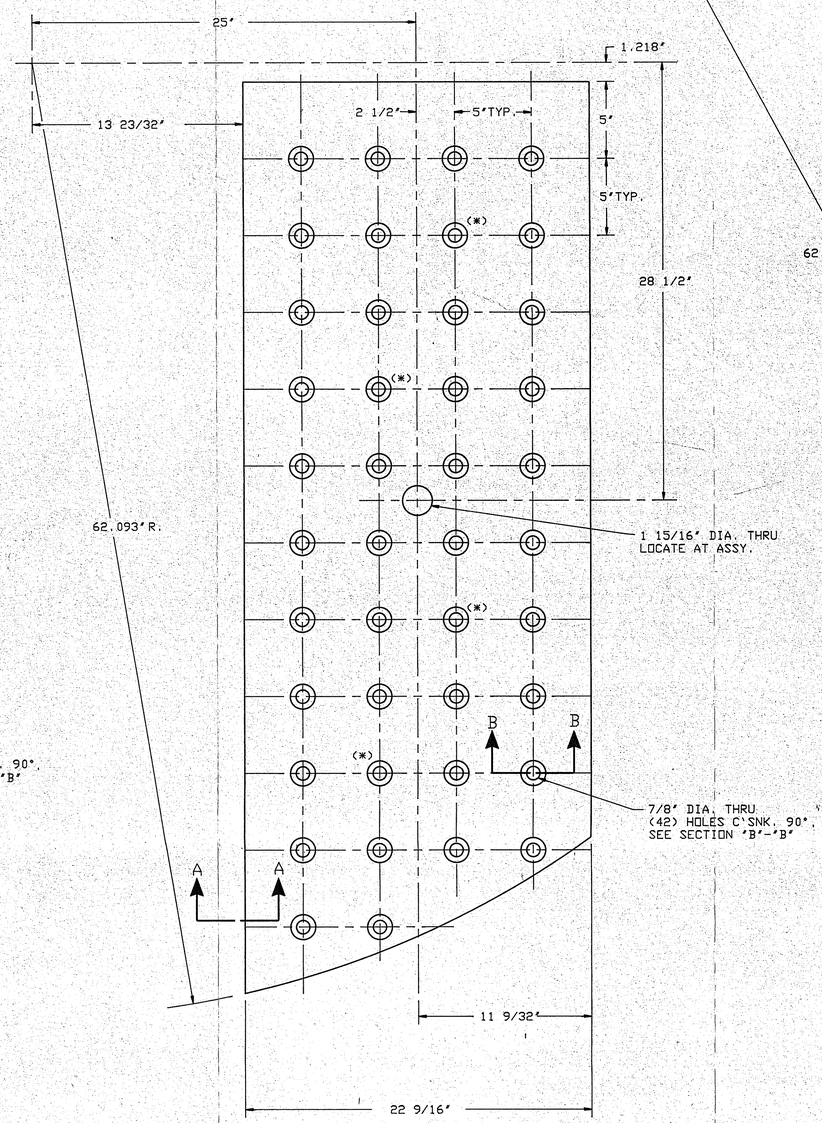

2 MIDDLE FILTER PLATE

SCALE-3"=1'

(2)REQ'D. AS SHOWN
(2)REQ'D. OPPOSITE HAND

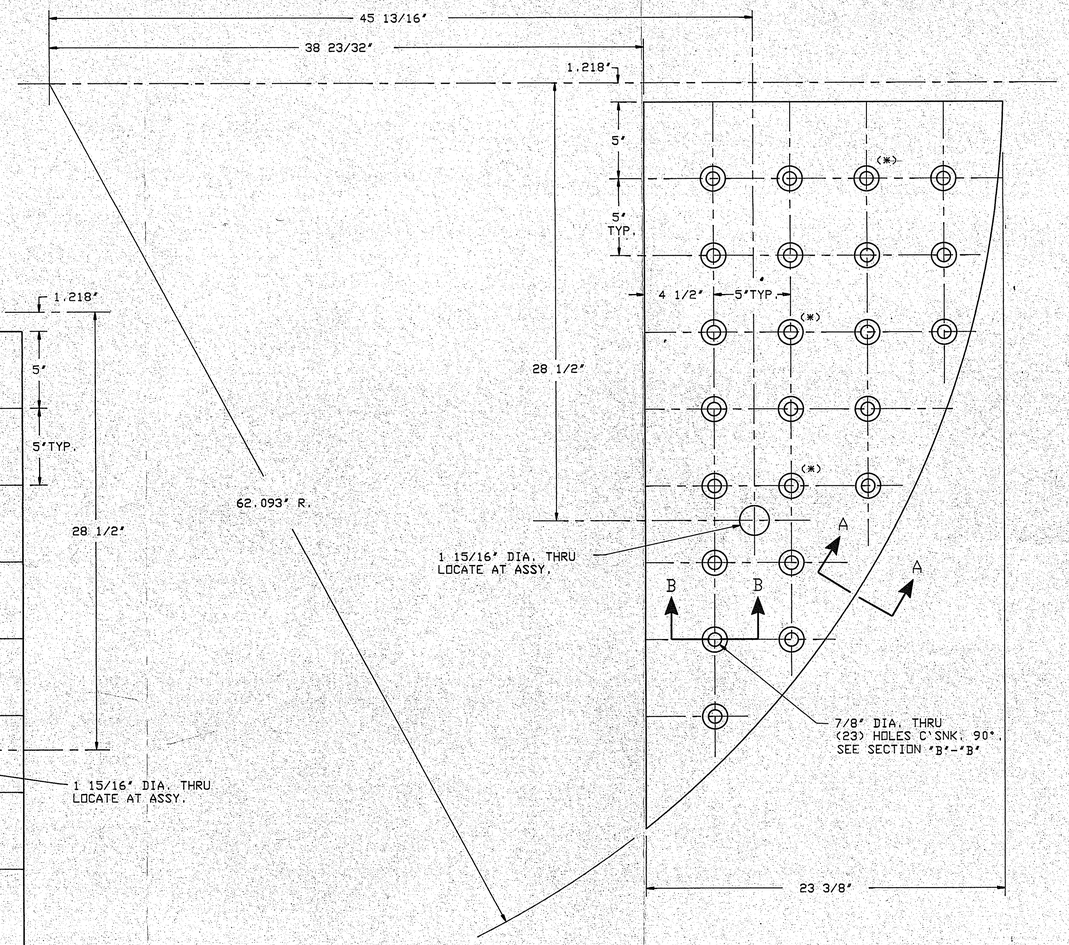

3 END FILTER PLATE

SCALE-3"=1'

(2) REQ'D. AS SHOWN
(2) REQ'D. OPPOSITE HAND

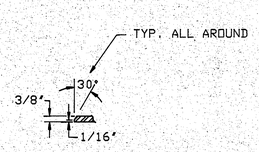

SECTION A-A

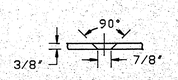

SECTION B-B

NOTE:
ALL HOLES WITH (*) SYMBOL
ARE TO HAVE STAY BARS
WITH TAPPED HOLES AT ASSY.

SIMONS-EASTERN CONSULTANTS, INC.
P.5262A
E-3600594 001 OF 001

SHIMIZU AMERICA CORP.
SOFIX CORPORATION

RECEIVED	06FEB91	COPIES	3+1
PO.	90-00001	FILE#	007
EQUIP.#	C-5100		

REVIEWED
FOR GENERAL COMPLIANCE WITH THE DESIGN CONCEPT OF THE PROJECT AND CONTRACT DOCUMENTS.
NO RESPONSIBILITY IS ASSUMED FOR CORRECTNESS OF DIMENSIONS OR DETAILS.

BY [illegible] DATE 2/15/91

- [ ] NOT ACCEPTABLE-NOT RELEASED FOR PRODUCTION-REVISE AND RESUBMIT
- [ ] SUBJECT TO REVISION AS INDICATED. RELEASED FOR PRODUCTION-SUBMIT CERTIFIED DRAWING
- [x] NO EXCEPTION TAKEN - RELEASED FOR PRODUCTION - SUBMIT CERTIFIED DRAWING
- [ ] CERTIFIED DRAWING ACCEPTED - RELEASED FOR PRODUCTION
- [ ] NOT REQUIRED BY SNCI/AS FOR ENGINEERING DESIGN

GASTON COUNTY DYEING MACHINE COMPANY
CHECK BY

- [ ] NO CORRECTIONS NOTED
- [ ] MAKE CORRECTIONS NOTED
- [ ] REVISE AND RESUBMIT
- [ ] REJECTED-SEE REMARKS

BY _____

DATE _____

ITEM NO	PART NO.	DRAWING NO.	MATERIAL OR DESCRIPTION	MATERIAL SPEC	MAT'L TYPE	QTY/PER	UM
003	9120027		PLATE,3/8" X 64" X 128" LG.	SA-240	304	.5860	UM
002	9120027		PLATE,3/8" X 64" X 128" LG.	SA-240	304	.6939	UM
001	9120027		PLATE,3/8" X 64" X 128" LG.	SA-240	304	.3567	UM

BILL OF MATERIAL - PART NUMBER

* CUT LENGTH ON THIS B.O.M. FOR REFERENCE ONLY

REV.	DESCRIPTION	DATE	BY	CHECKED	APPROVED
G					
F					
E					
D					
C					
B					
A					

[RETURN TO VENDOR]

PRINT FOR APPROVAL
Clarence L. Elandl
Customer Order No. 90-00001
Shop Order No. 90-EE-171
ROSENMUND 2.1.91
Charlotte, NC

GASTON COUNTY FABRICATION
A DIVISION OF GASTON COUNTY DYEING MACHINE COMPANY
STANLEY, NORTH CAROLINA 704-263-4765

This shop drawing is the property of Gaston County Dyeing Machine Company and is not to be reused without written permission.

CUSTOMER ROSENMUND INC. CHARLOTTE, N.C. FOR SOFIX CORP.

TITLE FILTER PLATE DETAILS, SIMPLE HEAT 8M2 FILTER VESSEL

CUSTOMER P.O. NO. 1747	CUSTOMER ITEM NO. CS100
DRAWN BY M.K.M. DATE 1-9-91	CHECKED BY [illegible] DATE 1-28-91
SHOP ORDER NO. F-80816A	NO. REQUIRED 1
SHEET 1 OF 1	
SCALE 3"=1'	No. E-3600594
REV.	

CAD REFERENCE NO.
RD00148A

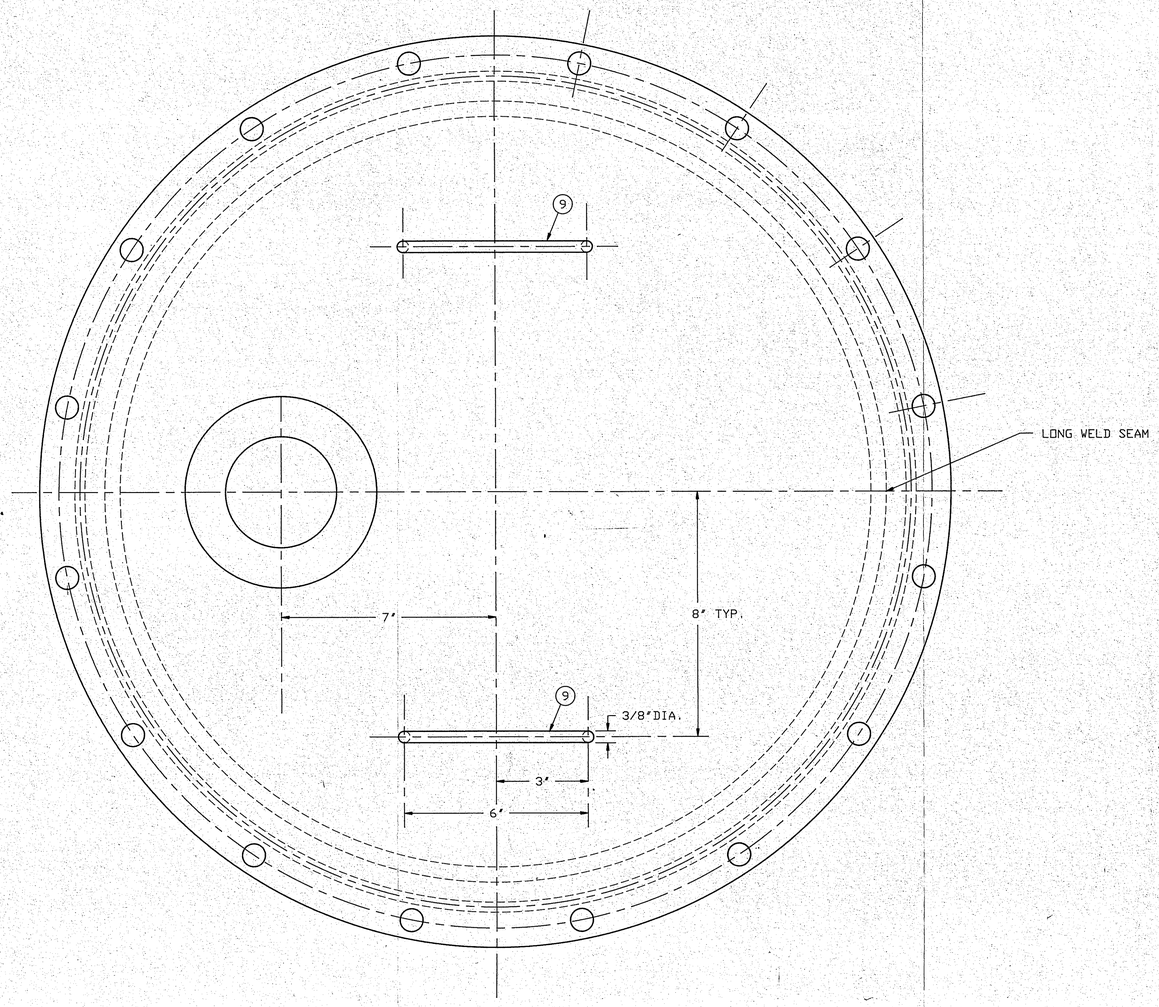

SOFIX WANTS THE MANWAY TYPE SHOWN ON ROSENMUND'S DRAWING W.O. E-3600509, WHICH WAS SHOWN TO US ON BARRY PERLMUTTER'S VISIT ON DEC. 20, 1990.

(**) 9. (2) REQ'D.
(**) 4. F.V.@400°F ASME STYLE 'B' WELD IN
(**) 2. +0 -1/16 X 1 3/4"THK.

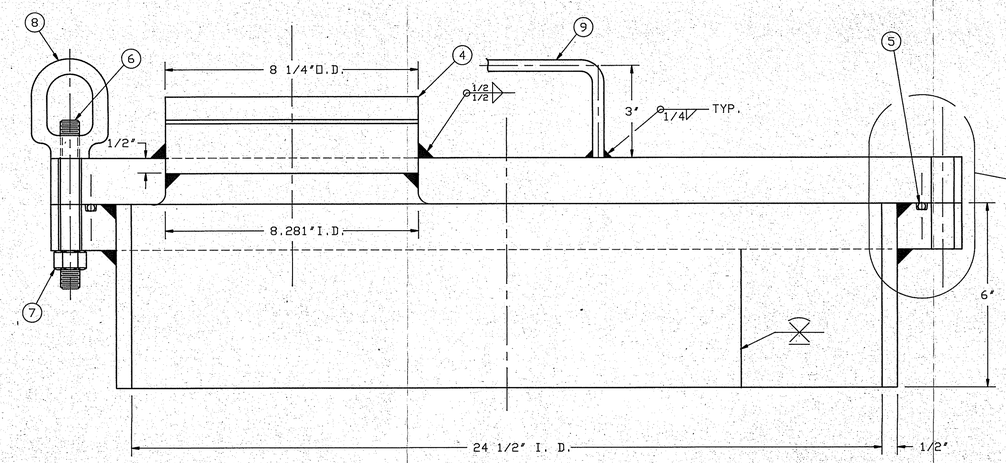

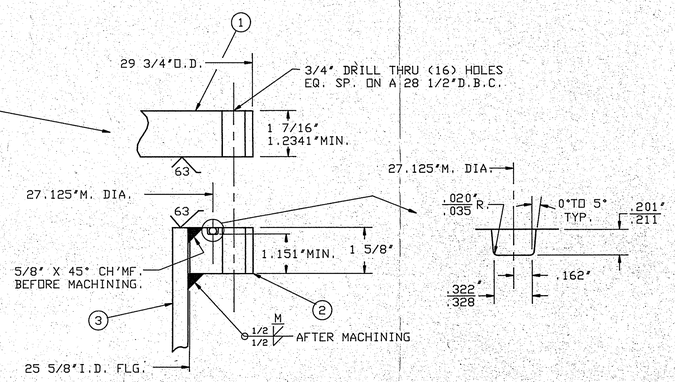

ITEM NO	PART NO.	DRAWING NO.	MATERIAL OR DESCRIPTION	MATERIAL SPEC	MAT'L TYPE	QTY/PER	UM
009	5105000		BAR,RND. 3/8" X 12"LG. (**)	SA-479	304	2.0000	
008	1601011	C-1601011	RING NUT 5/8"N.C.	SB-62	BRZ.	16	
007	9115372		NUT,HEX 5/8"N.C. (CAD. PLT.)	SA-1942H	C.S.	16	
006	9123192		STUD,THRD. 5/8"N.C. X 6 1/2"LG.,CAD.PL	SA-193B7	C.S.	16	
005	9125199		O-RING,.275"DIA. X 26 7/8"I.D. (TEF. ENC.)	VIT.		3	
004	9125198		SIGHT GLASS,PRESS. P. 6"-150# & (**)	SA-240	304	1	
003	6555038		PLATE,1/2"THK. X 6 1/4" X 78 9/16"	SA-240	304	0.02132	
002	9127076		RING,29 3/4"O.D.+1/16 -0 X 25 5/8" (**)	SA-240	304	1	
001	9127075		DISC,29 3/4"O.D.+1/16 -0 X 1 1/2"THK.	SA-240	304	1	
BILL OF MATERIAL PART NUMBER			* CUT LENGTH ON THIS B.O.M. FOR REFERENCE ONLY				

REV.	DESCRIPTION	DATE	BY	CHECKED	APPROVED
G					
F					
E					
D					
C					
B					
A					

RETURN TO VENDOR

SIMONS-EASTERN CONSULTANTS, INC.
E-3600598 P.5262A 001 OF 001
SHIMIZU AMERICA CORP.
SOFIX CORPORATION
RECEIVED 06FEB91 | COPIES 3+1
PO.90-00001 | FILE# 011
EQUIP.# C-5100
REVIEWED
FOR GENERAL CONFORMANCE WITH THE DESIGN CONCEPT OF THE PROJECT AND COMPLIANCE WITH CONTRACT. NO RESPONSIBILITY IS ASSUMED FOR CORRECTNESS OF DIMENSIONS OR DETAILS.
BY [illegible] DATE 2/5/91
[ ] NOT ACCEPTABLE-NOT RELEASED FOR PRODUCTION-REVISE AND RESUBMIT
[X] SUBJECT TO REVISION AS INDICATED. RELEASED FOR PRODUCTION-SUBMIT CERTIFIED DRAWINGS
[X] NO EXCEPTION TAKEN - RELEASED FOR PRODUCTION - SUBMIT CERTIFIED DRAWING
[ ] CERTIFIED DRAWING ACCEPTED - RELEASED FOR PRODUCTION
[ ] NOT REQUIRED BY SNCRS FOR ENGINEERING DESIGN.

GASTON COUNTY DYEING MACHINE CORPORATION
CHECK PRINTS
[ ] NO CORRECTIONS NOTED
[ ] MAKE CORRECTIONS NOTED
[ ] REVISE AND RESUBMIT
[ ] REJECTED-SEE REMARKS
BY
DATE

ASME CODE

CODE SPEC		DATE
REV	DATE	APP.

PRINT FOR APPROVAL
Customer Order No. 90-00001
Shop Order No. 90-PF-171
ROSENMUND Charlotte, NC 2-1-91

GASTON COUNTY FABRICATION
A DIVISION OF GASTON COUNTY DYEING MACHINE COMPANY
STANLEY, NORTH CAROLINA 704-263-4765

This shop drawing is the property of Gaston County Dyeing Machine Company and is not to be reused without written permission.

CUSTOMER ROSENMUND INC. CHARLOTTE, N.C. FOR SOFIX CORP.
TITLE 24 1/2" I.D. MANWAY ASSY.
CUSTOMER P.O. NO. 1747 | CUSTOMER ITEM NO. C5100
DRAWN BY MKM | DATE 1-16-91 | CHECKED BY [illegible] | DATE 1/25/91
SHOP ORDER NO. F-80816 | NO. REQUIRED 1 | SHEET 1 OF 1
SCALE 6"= 1' | No.E-3600598 | REV.

CAD REFERENCE NO. RD00149A

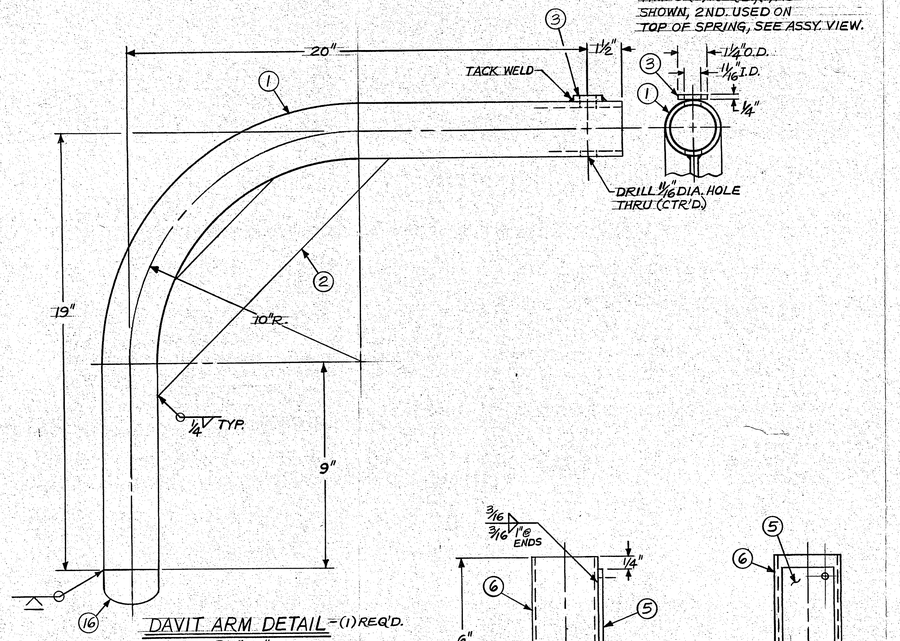

DAVIT ARM DETAIL - (1) REQ'D.
3/8" = 1"

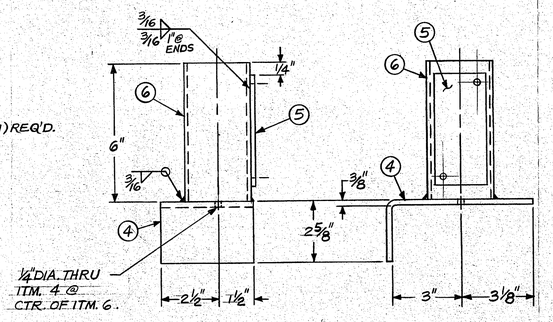

DAVIT ARM SUPPORT - (1) REQ'D.
3/8" = 1"

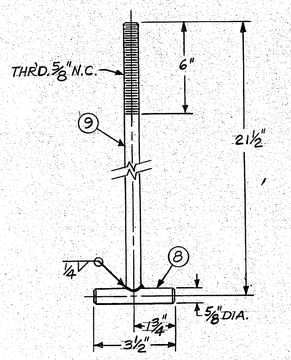

MANWAY LID SUPPORT - (1) REQ'D.
3/8" = 1"

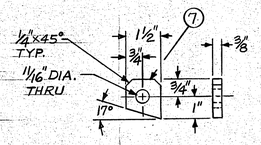

SUPPORT LUG - (2) REQ'D.
3/8" = 1"

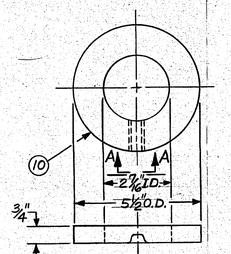

NOTE:
THIS RING MUST BE IN PROPER RELATION WITH LIMIT SWITCH. LOCATE AT TIME OF ASSY.

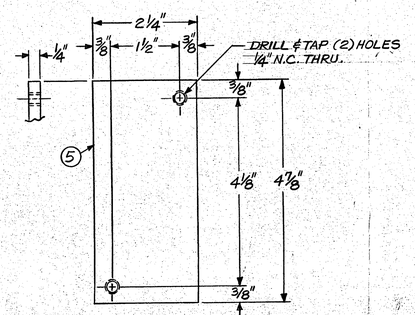

SWITCH MOUNTING PLATE - (1) REQ'D.
3/4" = 1"

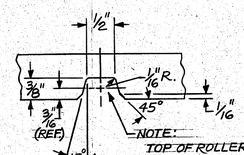

NOTE:
TOP OF ROLLER ON LIMIT SWITCH TO BE APPROX. ALONG THIS LINE AS SWITCH HAS .202" LENGTH OF TRAVEL.

VIEW A-A

SWITCH ACTIVATOR RING - (1) REQ'D.
3/8" = 1"

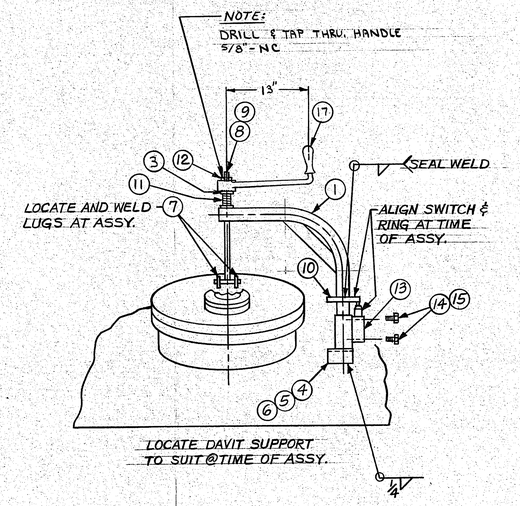

DAVIT ASSY.
N.T.S.

GASTON COUNTY DYEING MACHINE COMPANY
CHECK POINTS
[ ] NO CORRECTIONS NOTED
[ ] MAKE CORRECTIONS NOTED
[ ] REVISE AND RESUBMIT
[ ] REJECTED - SEE REMARKS
BY
BY
DATE
DATE

13. TOP PUSH ROLLER.
(✱✱) 11. x .177" DIA. WIRE, LEE STOCK # LHC-177 P-1.

SAME COMMENT SHOWN ON DWG. NO. E-3600598

ITEM NO.	QTY.	DESCRIPTION	MATERIAL	G.C. PART NO.	DRAWING NO.	QTY./PER.
60						
59						
58						
57						
56						
55						
54						
53						
52						
51						
50						
49						
48						
47						
46						
45						
44						
43						
42						
41						
40						
39						
38						
37						
36						
35						
34						
33						
32						
31						
30						
29						
28						
27						
26						
25						
24						
23						
22						
21						
20						
19						
18						
17	1	CRANK HANDLE, REID # CH-13	IRON	9125207		1
16	1	PIPE CAP, 2" SCH. 40 - WELD	C.S.	9103851		1
15	2	CAP SCREW, HEX SOC. HD. ¼" N.C. x 1¾" LG.	304	9121759		2
14	2	WASHER, SPRING LOCK - 1/4"	304	9005934		2
13	1	LIMIT SWITCH, SQ.D # 9007CR53-D (✱✱)	-	9125205		1
12	2	NUT, HEX 5/8" N.C.	SA-194 GR8	0100352		2
11	1	SPRING, COMPRESSION - 1.400 O.D. x 2½" LG. (✱✱)	CAD. PLTD., MB WIRE	9143949		1
10	1	RING, 5½" O.D. ±1/8 x 2 11/16" I.D. ±1/8 I.D. x ¾"	304	9106655		1
9	1	BAR, RND. 5/8" DIA. x 21 3/16" LG.	SA-479-304	5107000		1.766
8	1	BAR, RND. 5/8" DIA. x 3½" LG.	SA-479-304	5107000		0.292
7	2	BAR, FL. 3/8" x 1½" x 1¾" LG.	SA-479-304	5019000		0.292
6	1	PIPE, 2½" SCH. 40 x 6" LG.	304	5232000		0.500
5	1	PLATE 1/4" x 2¼" x 4⅞"	SA-240-304	6555021		0.00048
4	1	PLATE 3/8" x 4" x 8¾" LG.	SA-240-304	6555025		0.00152
3	2	BAR, RND. 1/4" O.D. x 1/4" LG.	304	5119000		0.042
2	1	BAR, FL. 3/8" x 3" x 14½" LG.	C.S.	5533000		1.210
1	1	PIPE, 2" SCH. 80 x 36¼" LG.	C.S.	9000200		3.021

BILL OF MATERIAL P/N 3600600

REV.	DESCRIPTION	DATE	BY	CHECKED	APPROVED
G					
F					
E					
D					
C					
B					
A					

RETURN TO VENDOR

SIMONS-EASTERN CONSULTANTS, INC.
P.5262A
E-3600600 001 OF 001
SHIMIZU AMERICA CORP.
SOFIX CORPORATION
RECEIVED 06FEB91 | COPIES 3+1
P.O. 90-00001 | FILE # 012
EQUIP # C-5100
REVIEWED
FOR GENERAL COMPLIANCE WITH THE DESIGN CONCEPT OF THE PROJECT AND CONTRACT DOCUMENTS.
NO RESPONSIBILITY IS ASSUMED FOR CORRECTNESS OF DIMENSIONS OR DETAILS.
BY DATE 2/15/91
[ ] NOT ACCEPTABLE - NOT RELEASED FOR PRODUCTION - REVISE AND RESUBMIT
[X] SUBJECT TO REVISION AS NOTED (✱) - RELEASED FOR PRODUCTION - SUBMIT CERTIFIED DRAWINGS.
[X] NO EXCEPTION TAKEN - RELEASED FOR PRODUCTION - SUBMIT CERTIFIED DRAWINGS.
[ ] CERTIFIED DRAWING ACCEPTED - RELEASED FOR PRODUCTION.
[ ] NOT REQUIRED BY SIMONS FOR ENGINEERING DESIGN.

PRINT FOR APPROVAL
Customer Order No. 90-00001
Shop Order No. 90-EF-171
ROSENMUND Charlotte, NC 2-1-91

GASTON COUNTY FABRICATION
A DIVISION OF GASTON COUNTY DYEING MACHINE COMPANY
STANLEY, NORTH CAROLINA 704-263-4765

This shop drawing is the property of Gaston County Dyeing Machine Company and is not to be reused without written permission.

CUSTOMER ROSENMUND INC., CHARLOTTE, N.C.
FOR SOFIX CORP.
TITLE MANWAY DAVIT ASSY.
CUSTOMER P.O. NO. 1747 | CUSTOMER ITEM NO. C5100
DRAWN BY MKM | DATE 1-16-91 | CHECKED BY | DATE
SHOP ORDER NO. F-80816A | NO. REQUIRED | SHEET 1 OF 1
SCALE NOTED | No. E-3600600 | REV.

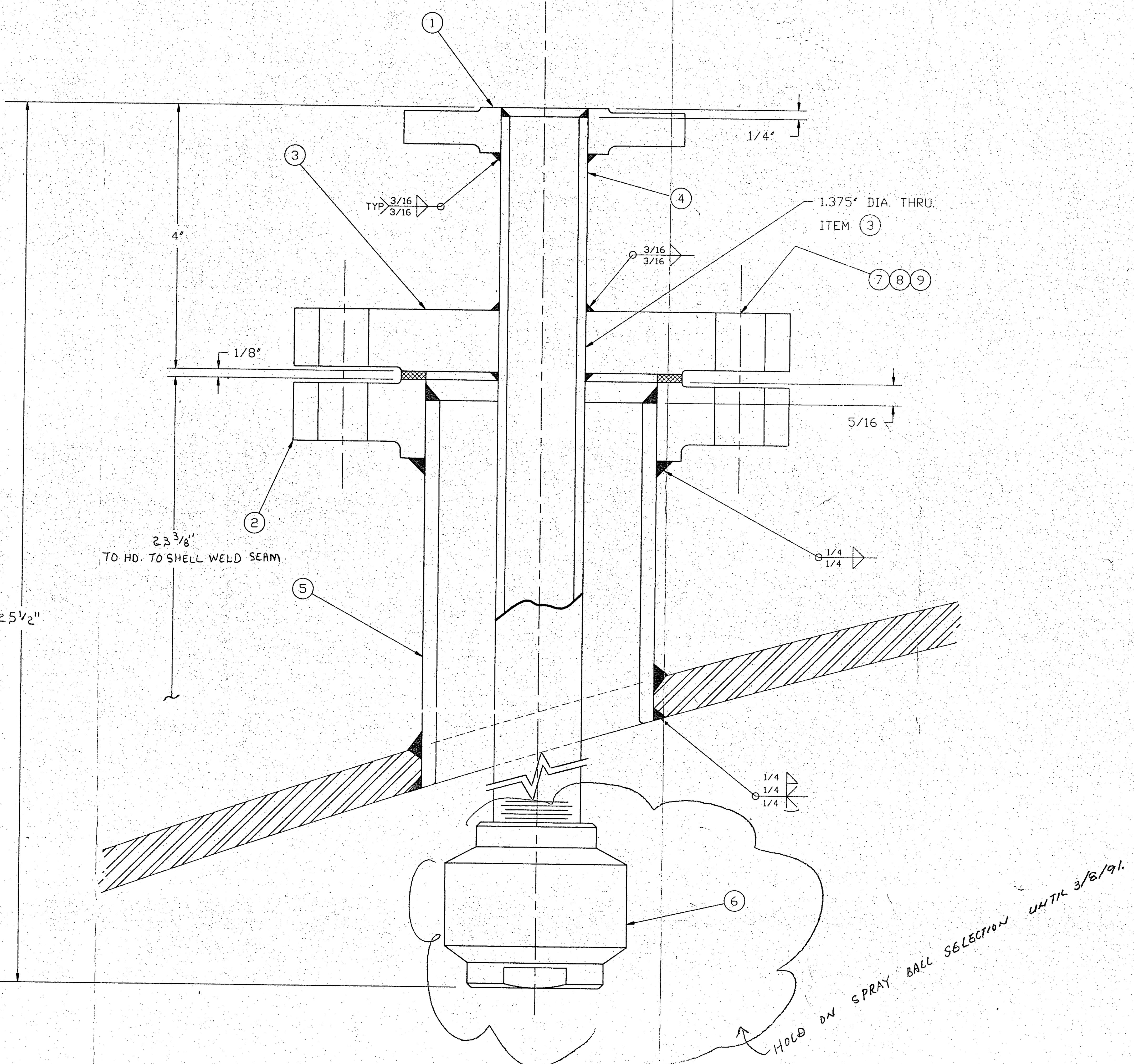

(*) 6 No.27500-E-1-90-TEF

SIMONS-EASTERN CONSULTANTS, INC.
P.5262A
E-3600622 001 OF 001
SHIMIZU AMERICA CORP.
SOFIX CORPORATION
RECEIVED 06FEB91 COPIES 3+1
P.O. 90-00001 FILE # 013
EQUIP. # C-5100
REVIEWED
FOR GENERAL COMPLIANCE WITH THE DESIGN CONCEPT OF THE PROJECT AND CONTRACT DOCUMENTS. NO RESPONSIBILITY IS ASSUMED FOR CORRECTNESS OF DIMENSIONS OR DETAILS.
BY [signature] DATE 2/15/91
- [ ] NOT ACCEPTABLE-NOT RELEASED FOR PRODUCTION-REVISE AND RESUBMIT.
- [ ] SUBJECT TO REVISION AS INDICATED. RELEASED FOR PRODUCTION-SUBMIT CERTIFIED DRAWINGS.
- [x] NO EXCEPTION TAKEN - RELEASED FOR PRODUCTION - SUBMIT CERTIFIED DRAWING.
- [ ] CERTIFIED DRAWING ACCEPTED - RELEASED FOR PRODUCTION
- [ ] NOT REQUIRED BY SIMONS FOR ENGINEERING DESIGN

GASTON COUNTY DYEING MACHINE COMPANY
CHECK PRINTS
[ ] NO CORRECTIONS NOTED
[ ] MAKE CORRECTIONS NOTED
[ ] REVISE AND RESUBMIT
[ ] REJECTED - SEE REMARKS
BY ____
DATE ____

ITEM NO	PART NO.	DRAWING NO.	MATERIAL OR DESCRIPTION	MATERIAL SPEC	MAT'L TYPE	QTY/PER	UM
015							
014							
013							
012							
011							
010							
009	9103495		GASKET, 5-3/8" OD X 3-1/2" ID X 1/8" THK	TEFLON		1	
008	0100352		NUT, HEX 5/8" NC	SA-194-GR8	304	8	
007	0100031		STUD, THR'D 5/8" NC X 3-3/4" LG	SA-193-B8	304	4	
006	9125188		ROTARY TANK WASHING NOZZLE, SPRAYING SYSTEMS (*)	TEFLON		1	
005	5233000		PIPE, 3" SCH 40 X 8 3/8" LG.	SA-312	304	.750	
004	5228000		PIPE, 1" SCH 40 X 23 3/16" LG.	SA-312	304	2.00	
003	0100458		FLANGE, BLIND 3" 150# ANSI	SA-182	304	1	
002	0100508		FLANGE, RFSO 3" 150# ANSI	SA-182	304	1	
001	0100503		FLANGE, RFSO 1" 150# ANSI	SA-182	304	1	

BILL OF MATERIAL PART NUMBER: 3605901

* CUT LENGTH ON THIS B.O.M. FOR REFERENCE ONLY

REV.	DESCRIPTION	DATE	BY	CHECKED	APPROVED
G					
F					
E					
D					
C					
B	RETURN TO VENDOR				
A					

PRINT FOR APPROVAL
[signature: Clarence S. Darnell]
Customer Order No. 90-00001
Shop Order No. 90-RF-171
ROSENMUND
Charlotte, NC 2.1.91

GASTON COUNTY FABRICATION
A DIVISION OF GASTON COUNTY DYEING MACHINE COMPANY
STANLEY, NORTH CAROLINA 704 263-4765

This shop drawing is the property of Gaston County Dyeing Machine Company and is not to be reused without written permission.

CUSTOMER ROSENMUND INC. CHARLOTTE, N.C. FOR SOFIX CORP.
TITLE SPRAY NOZZLE ASS'Y
CUSTOMER P.O. NO. 1747 — CUSTOMER ITEM NO. C-5100
DRAWN BY G.M. — DATE 12-19-90 — CHECKED BY [signature] — DATE 1-28-91
SHOP ORDER NO. F-80816A — NO. REQUIRED — SHEET OF
SCALE 1" = 1" — No. E-3600622 — REV.

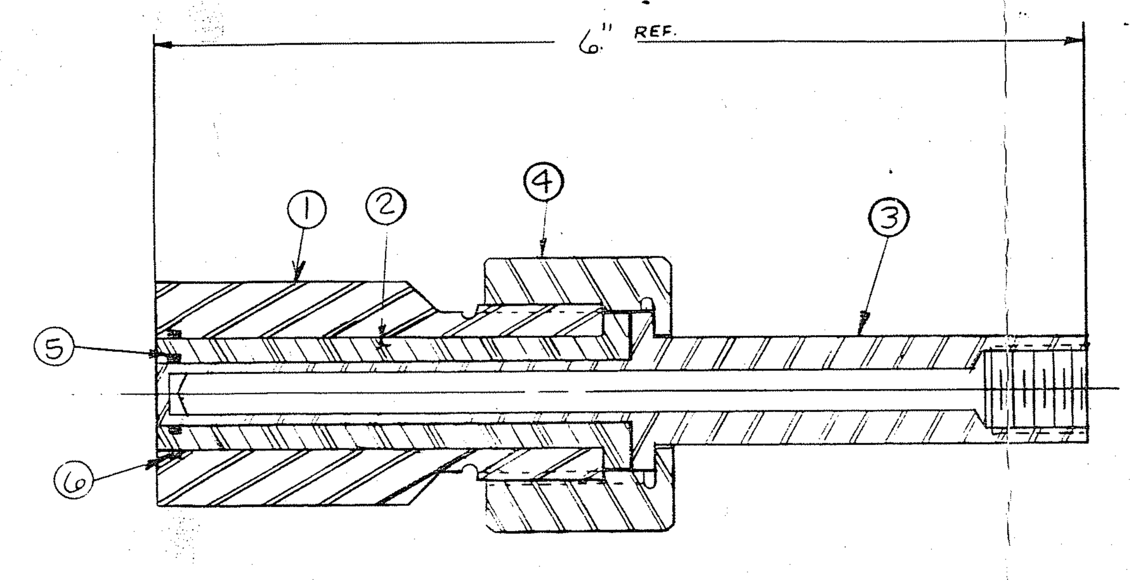

THERMOWELL ASS'Y

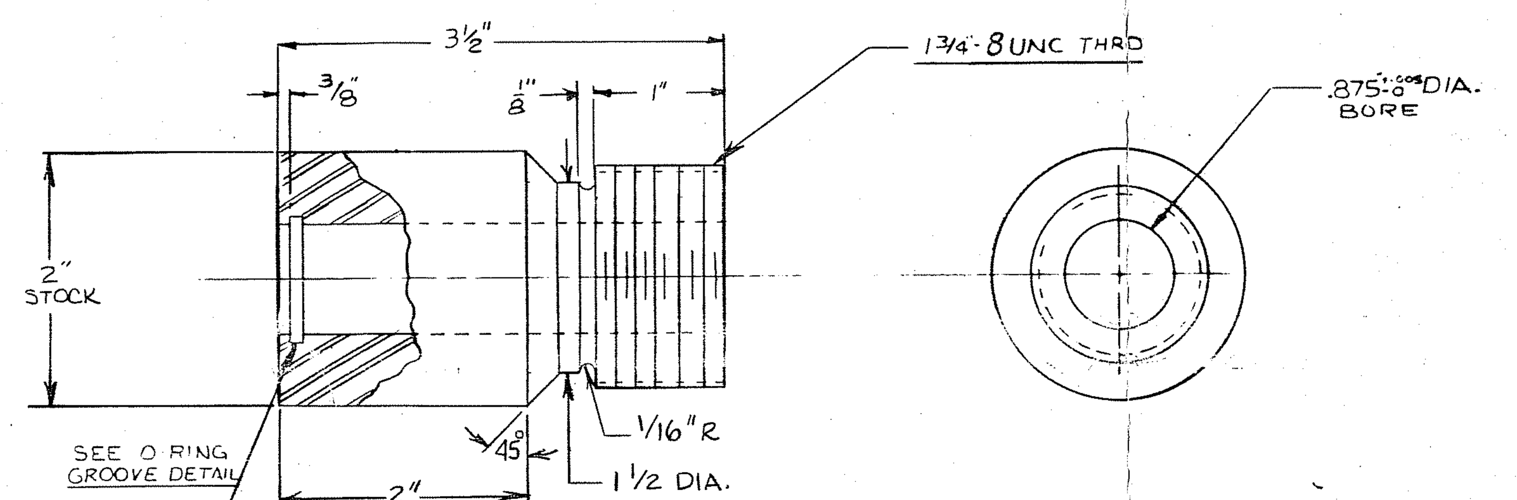

① HOUSING

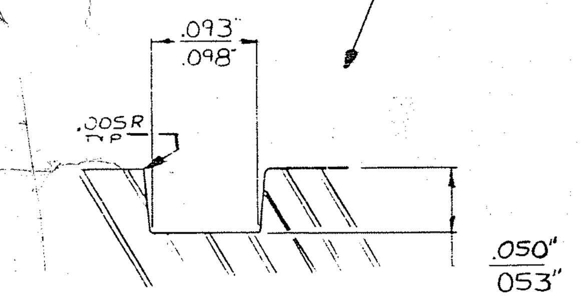

O-RING GROOVE DETAIL

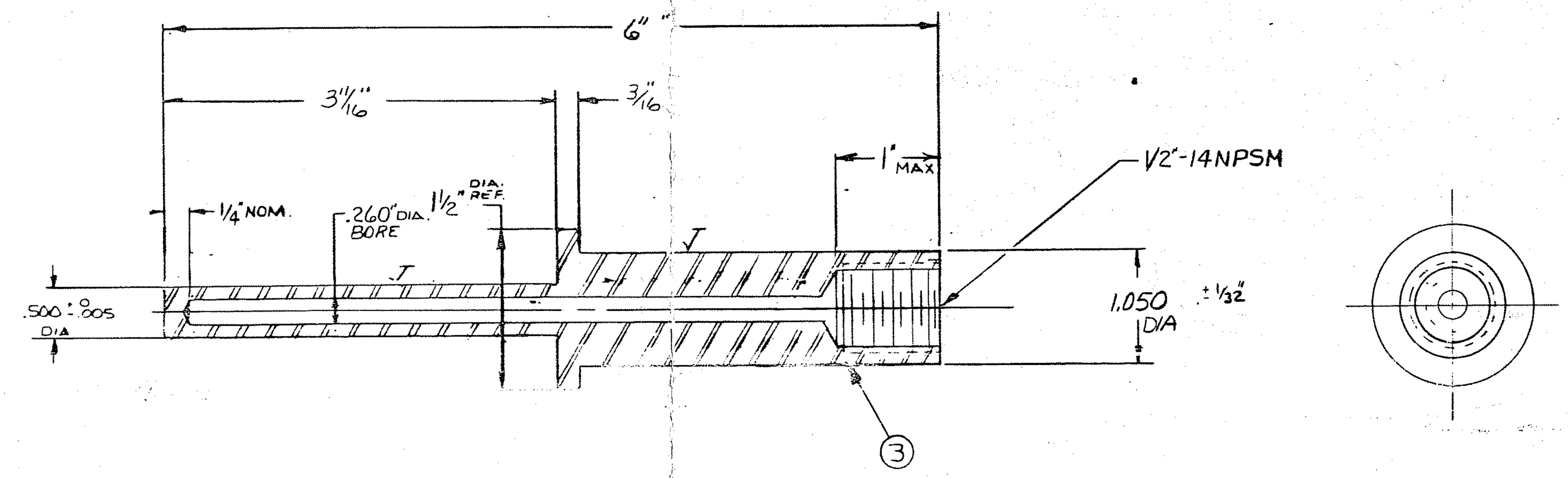

INTERNAL SLEEVE Ⓐ

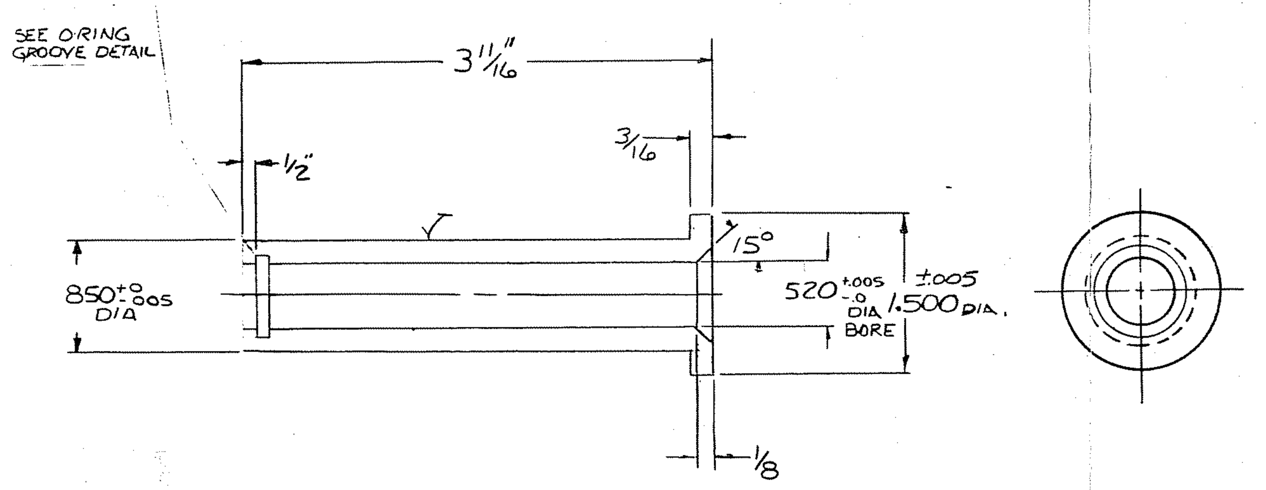

② BUSHING

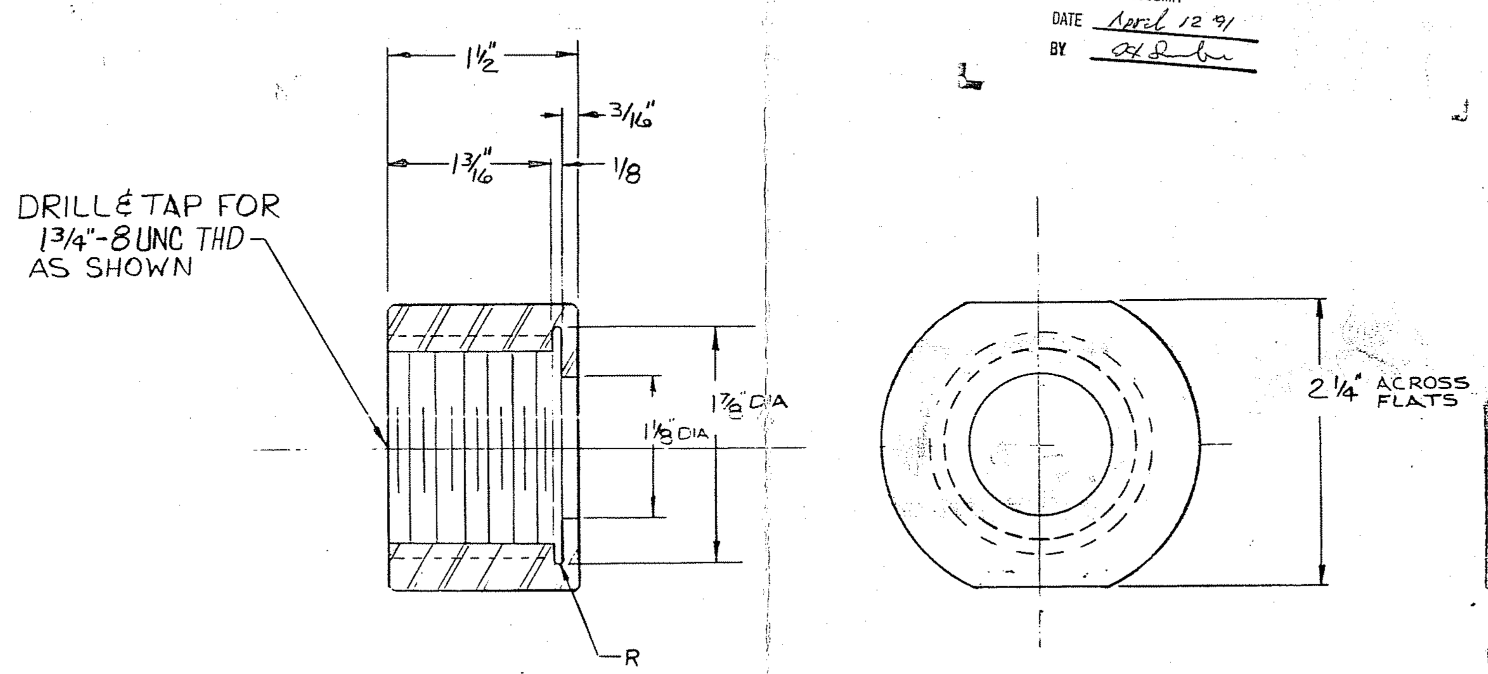

④ HOLD DOWN NUT

1. MILL TEST REPORTS REQ'D ON ITEM 1

SIMONS-EASTERN CONSULTANTS, INC.
P.5262A
E-3600511 001 OF 001
SHIMIZU AMERICA CORP.
SOFIX CORPORATION

RECEIVED 02APR91	COPIES 2+1
P.O. 90-00001	FILE # 014
EQUIP. #	

REVIEWED
FOR GENERAL COMPLIANCE WITH THE DESIGN CONCEPT OF THE PROJECT AND CONTRACT DOCUMENTS. NO RESPONSIBILITY IS ASSUMED FOR CORRECTNESS OF DIMENSIONS OR DETAILS.
BY [signature] DATE 4/5/91

- ☐ NOT ACCEPTABLE-NOT RELEASED FOR PRODUCTION-REVISE AND RESUBMIT.
- ☐ SUBJECT TO REVISION AS INDICATED. RELEASED FOR PRODUCTION-SUBMIT CERTIFIED DRAWINGS.
- ☐ NO EXCEPTION TAKEN - RELEASED FOR PRODUCTION - SUBMIT CERTIFIED DRAWING.
- ☒ CERTIFIED DRAWING ACCEPTED - RELEASED FOR PRODUCTION.
- ☐ NOT REQUIRED BY SIMONS FOR ENGINEERING DESIGN.

SHIMIZU AMERICA CORP.
This review implies General Conformance with the Design Concept of the Project and with information given in the Contract Documents only. Review of the submittals by SHIMIZU is not to be interpreted as a detailed investigation of information provided in the submittals or as approval to deviate from the requirements of the Contract Documents.

- "A" ☑ APPROVED AS SUBMITTED
- "B" ☐ APPROVED AS INDICATED
- "C" ☐ REVISE AND RESUBMIT
- "D" ☐ REJECTED, RESUBMIT

DATE April 12 '91
BY [signature]

RECEIVED
APR 1 1991
SHIMIZU AMERICA CORP.

CERTIFIED PRINT
[signature] 3/25/91
Customer Order No.
Shop Order No.
GASTON COUNTY DYEING MACHINE CO.
Stanley, N. C.

CERTIFIED PRINT
[signature]
Customer Order No. 90-00001
Shop Order No. 90-RF-171
ROSENMUND
Charlotte, N. C. 3/26/91

ITEM NO.	QTY.	DESCRIPTION		MATERIAL	G.C. PART NO.	DRAWING NO.	QTY./PER.
60							
59							
58							
57							
56							
55							
54							
53							
52							
51							
50							
49							
48							
47							
46							
45							
44							
43							
42							
41							
40							
39							
38							
37							
36							
35							
34							
33							
32							
31							
30							
29							
28							
27							
26							
25							
24							
23							
22							
21							
20							
19							
18							
17							
16							
15							
14							
13							
12							
11							
10							
9							
8							
7							
6	1	O-RING, .070 DIA x ½" NOM DIA (.864 ID)		TEFLON	9125142		1
5	1	O-RING, .070 DIA x ½" NOM DIA (.484 ID)		TEFLON	9125141		1
4	1	BAR RND 2½" x 1½" LG	SA 479	304	5124000		.125
3	1	BAR, RND 1½" DIA x 6" LG		316L	9122951		.5000
2	1	BAR, RND 1½" DIA x 3 11/16" LG		PTFE	9125162		.30729
1	1	BAR, RND 2" DIA. x 3½" LG (SEE NOTE 1)		SA479 - 316L	9122982		.2 11/16

BILL OF MATERIAL P/N 3600511

REV.	DESCRIPTION	DATE	BY	CHECKED	APPROVED
G					
F					
E					
D					
C					
B					
A					

ASME CODE
W. Medl[illegible] 12/10/90

GASTON COUNTY FABRICATION
A DIVISION OF GASTON COUNTY DYEING MACHINE COMPANY
STANLEY, NORTH CAROLINA 704 263 4765

RETURN TO VENDOR

This shop drawing is the property of Gaston County Dyeing Machine Company and is not to be reused without written permission.

CUSTOMER ROSENMUND	
TITLE THERMOWELL ASS'Y, TH'D SLEEVE 316L	
CUSTOMER P.O. NO.	CUSTOMER ITEM NO.
DRAWN BY RD DAVIS DATE 15 OCT 90	CHECKED BY [signature] DATE 10/18/90
SHOP ORDER NO.	NO. REQUIRED / SHEET OF
SCALE NONE EXCEPT NOTED	No. E-3600511 REV.

02-190
PC-V-142

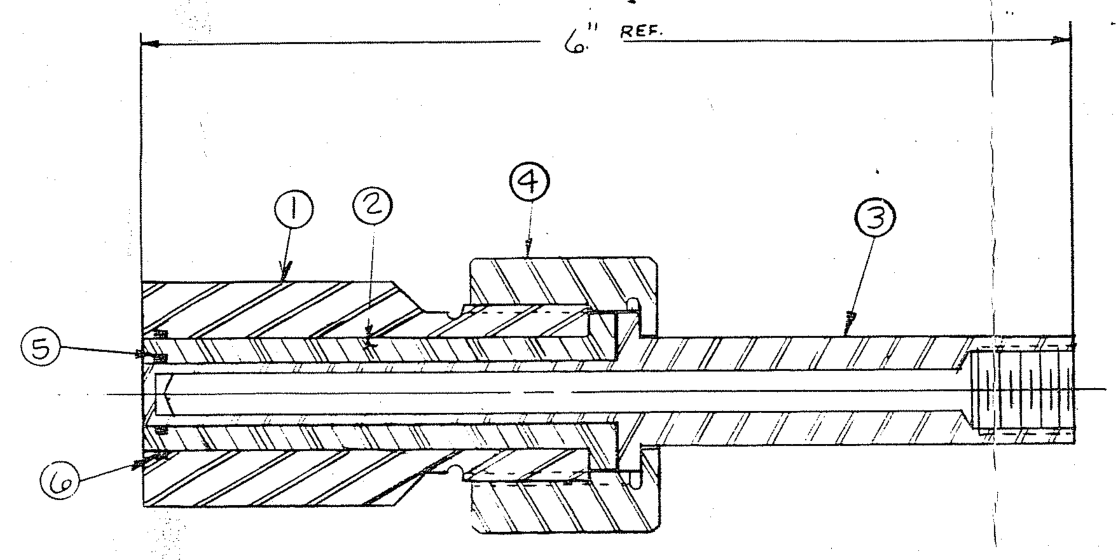

THERMOWELL ASS'Y

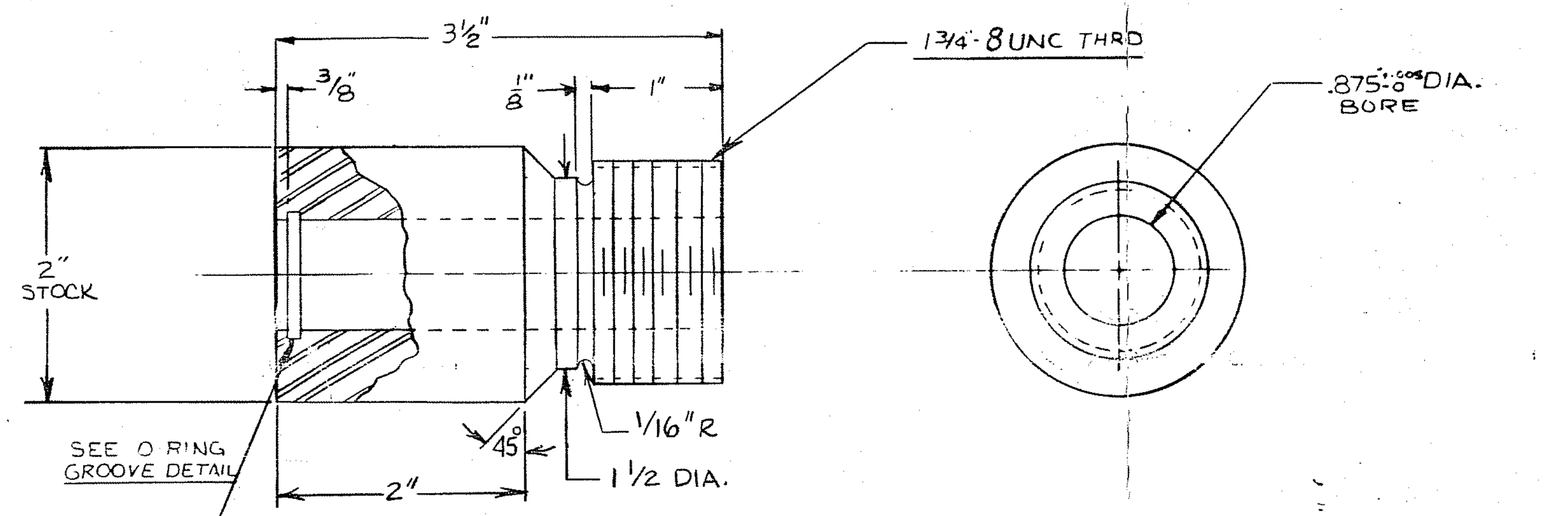

① HOUSING

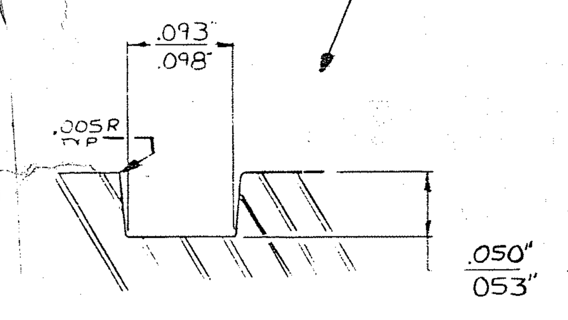

O-RING GROOVE DETAIL

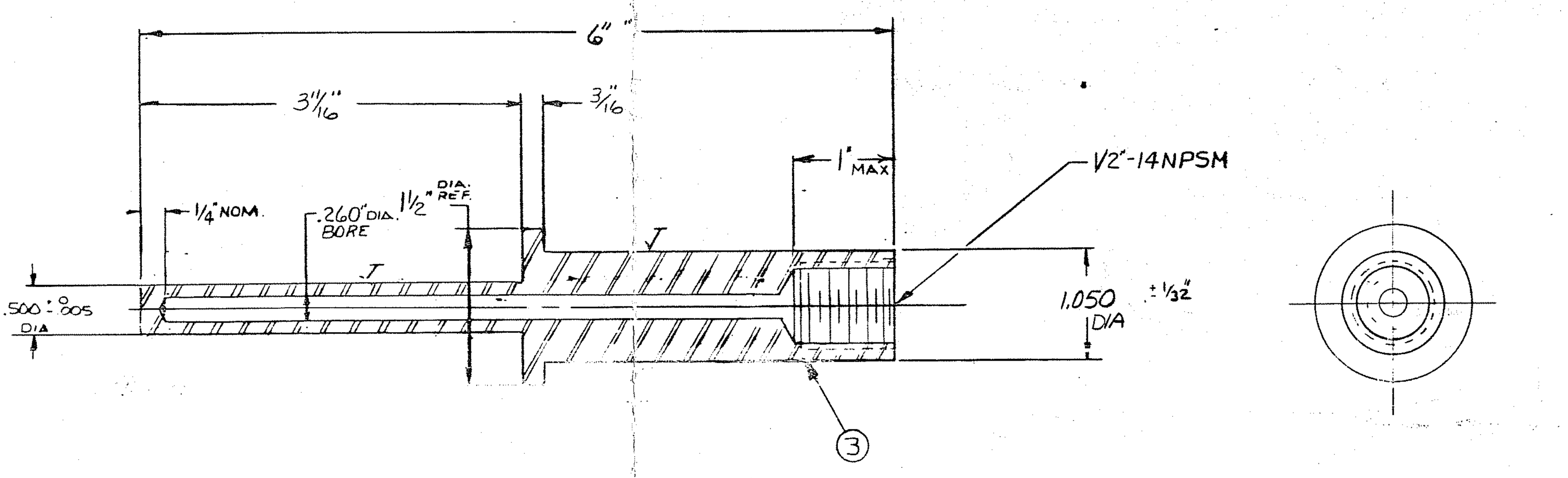

INTERNAL SLEEVE Ⓐ

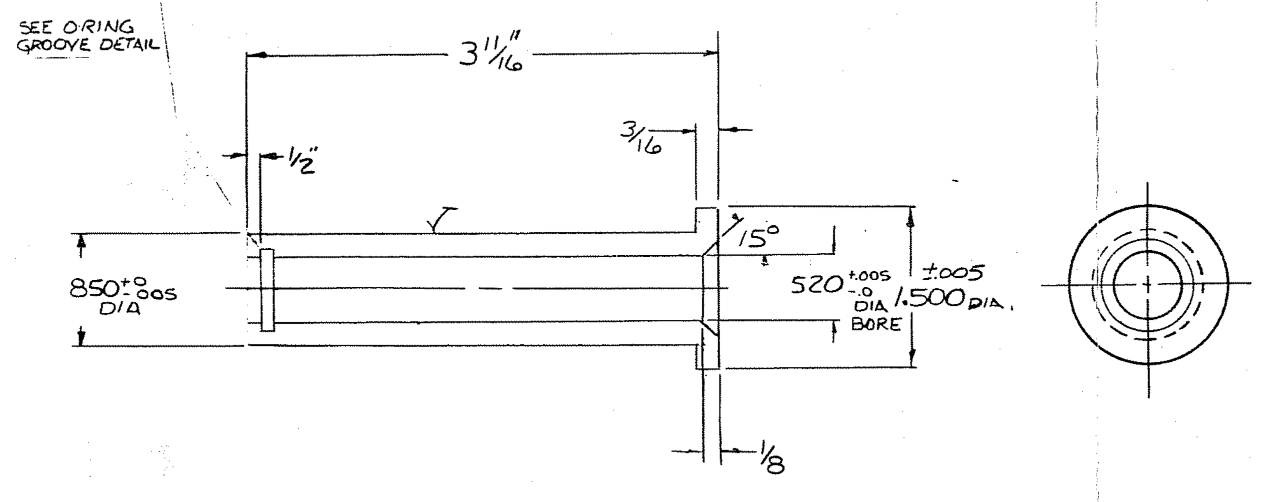

② BUSHING

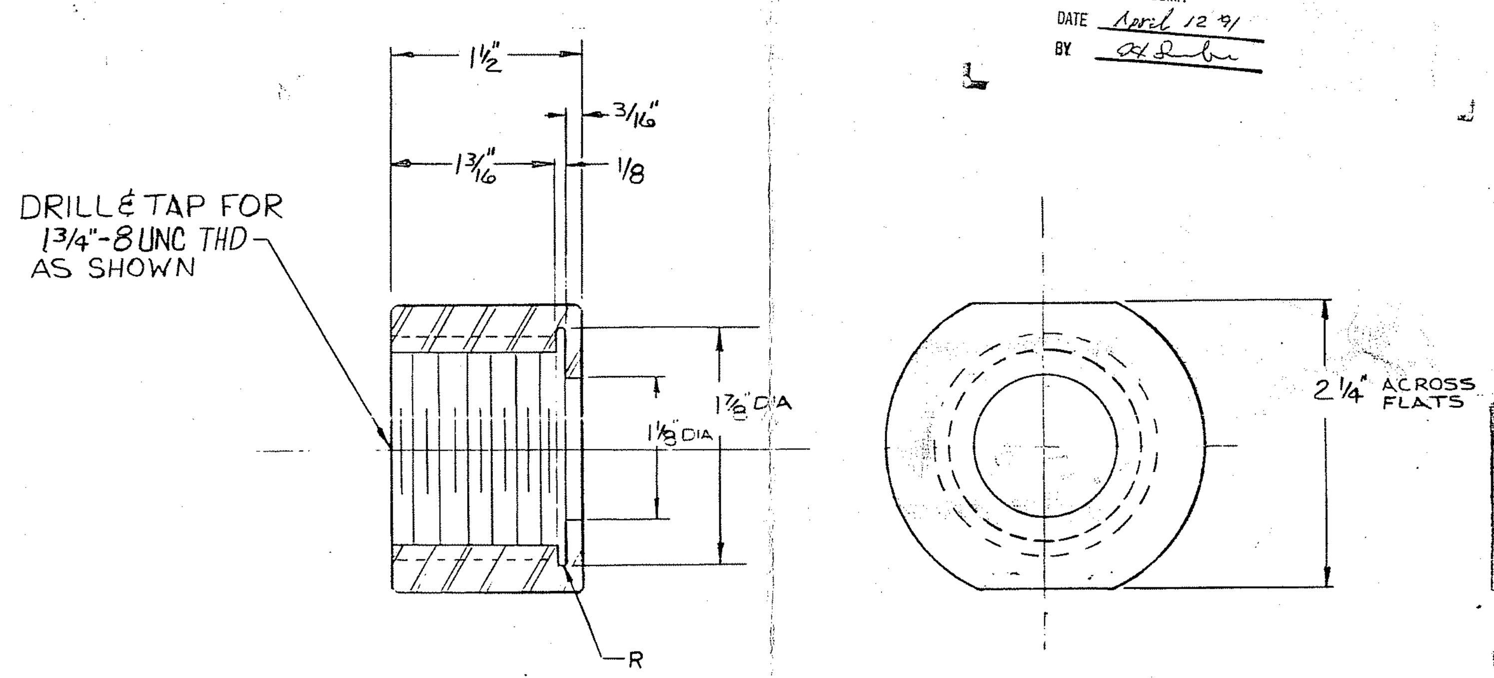

④ HOLD DOWN NUT

1. MILL TEST REPORTS REQD ON ITEM 1

SIMONS-EASTERN CONSULTANTS, INC.
P.5262A
E-3600511 001 OF 001
SHIMIZU AMERICA CORP.
SOFIX CORPORATION
RECEIVED 02APR91 COPIES 2+1
P.O. 90-00001 FILE # 014
EQUIP. #
REVIEWED
FOR GENERAL COMPLIANCE WITH THE DESIGN CONCEPT OF THE PROJECT AND CONTRACT DOCUMENTS. NO RESPONSIBILITY IS ASSUMED FOR CORRECTNESS OR DIMENSIONS OR DETAILS.
BY [signature] DATE 4/5/91
☐ NOT ACCEPTABLE-NOT RELEASED FOR PRODUCTION-REVISE AND RESUBMIT.
☐ SUBJECT TO REVISION AS INDICATED. RELEASED FOR PRODUCTION-SUBMIT CERTIFIED DRAWINGS.
☐ NO EXCEPTION TAKEN - RELEASED FOR PRODUCTION - SUBMIT CERTIFIED DRAWING.
☒ CERTIFIED DRAWING ACCEPTED - RELEASED FOR PRODUCTION.
☐ NOT REQUIRED BY SIMONS FOR ENGINEERING DESIGN.

SHIMIZU AMERICA CORP.
This review implies General Conformance with the Design Concept of the Project and with information given in the Contract Documents only. Review of the submittals by SHIMIZU is not to be interpreted as a detailed investigation of information provided in the submittals or as approval to deviate from the requirements of the Contract Documents.
"A" ☑ APPROVED AS SUBMITTED
"B" ☐ APPROVED AS INDICATED
"C" ☐ REVISE AND RESUBMIT
"D" ☐ REJECTED, RESUBMIT
DATE April 12 91
BY [signature]

RECEIVED
APR 1 1991
SHIMIZU AMERICA CORP.

CERTIFIED PRINT
[signature] 3/25/91
Customer Order No.
Shop Order No.
GASTON COUNTY DYEING MACHINE CO.
Stanley, N. C.

CERTIFIED PRINT
[signature]
Customer Order No. 90-00001
Shop Order No. 90-EF-171
ROSENMUND
Charlotte, N. C. 3-26-91

ASME CODE
W. Medl... 12/10/90

ITEM NO.	QTY.	DESCRIPTION	MATERIAL	G.C. PART NO.	DRAWING NO.	QTY./PER.
60						
59						
58						
57						
56						
55						
54						
53						
52						
51						
50						
49						
48						
47						
46						
45						
44						
43						
42						
41						
40						
39						
38						
37						
36						
35						
34						
33						
32						
31						
30						
29						
28						
27						
26						
25						
24						
23						
22						
21						
20						
19						
18						
17						
16						
15						
14						
13						
12						
11						
10						
9						
8						
7						
6	1	O-RING, .070 DIA X 1/2" NOM DIA (.864 ID)	TEFLON	9125142		1
5	1	O-RING, .070 DIA X 1/2" NOM DIA (.484 ID)	TEFLON	9125141		1
4	1	BAR RND 2½" x 1½" LG SA 479	304	5124000		.125
3	1	BAR RND 1½" DIA x 6" LG	316L	9122951		.5000
2	1	BAR RND 1½" DIA X 3 11/16" LG	PTFE	9125162		.30729
1	1	BAR RND 2" DIA. X 3½" LG (SEE NOTE 1)	SA479 - 316L	9122982		.29166

BILL OF MATERIAL P/N 3600511

REV.	DESCRIPTION	DATE	BY	CHECKED	APPROVED
G					
F					
E					
D					
C					
B					
A					

GASTON COUNTY FABRICATION
A DIVISION OF GASTON COUNTY DYEING MACHINE COMPANY
STANLEY, NORTH CAROLINA 704 263 4765

RETURN TO VENDOR

This shop drawing is the property of Gaston County Dyeing Machine Company and is not to be reused without written permission.

CUSTOMER ROSENMUND
TITLE THERMOWELL ASS'Y, TH'D SLEEVE 316L
CUSTOMER P.O. NO. | CUSTOMER ITEM NO.
DRAWN BY RD DAVIS DATE 15 OCT 90 | CHECKED BY R. McGee DATE 10/18/90
SHOP ORDER NO. | NO. REQUIRED | SHEET OF
SCALE NONE / EXCEPT NOTED | No. E-3600511 | REV.

02-190
PC-V-142
20

BILL OF MATERIAL

ITEM	QTY	MFR	CAT. NO.	DESCRIPTION
1	34	SQUARE D	9080GR6	TERMINAL BLOCK
2	5	SQUARE D	9001SKPIR31	PILOT LIGHT – RED
3	3	SQUARE D	9001SKPIG31	PILOT LIGHT – GREEN
4	1	SQUARE D	9001SKR9RH147	PUSH – PULL SWITCH
5	1	SQUARE D	9001SKRIBH126	MOMENTARY PUSHBUTTON
6	5	SQUARE D	9001SKS53FBH128	3 POS. SEL. SW. RET. TO CTR.
7	1	SQUARE D	9001SKS43FBH128	3 POS. SEL. SW. MAINT. POS.

NOTES:

1. NUMBERS IN PARENTHESES REFER TO ITEM NO. IN BOM.
2. BOM COVERS DEVICES IN THE LOCAL AND AGITATOR CONTROL PANEL. DEVICES MOUNTED ON THE FILTER AND IN THE HYDRAULIC PACKS ARE NOT INCLUDED.

LEGEND

- TERMINAL ON LCP
- TERMINAL ON ACP
- TERMINAL ON AUX. HYDRAULIC PACK
- TERMINAL ON FILTER OR CUST. – SUPPLIED DEVICE
- CONNECTION TO ANOTHER POINT ON DRAWING. NOT A TERMINAL DESIGNATION
- INTERCONNECT WIRING BY CUSTOMER
- N.O. LIMIT SWITCH
- 3–POSITION SELECTOR SWITCH
- 2–POSITION SELECTOR SWITCH
- PUSHBUTTON SWITCH MOMENTARY CONTACT N.O.
- N.C. PUSH–PULL SWITCH MAINTAINED CONTACT
- PROXIMITY SENSOR
- PRESSURE SWITCH – OPEN ON INC. PRESSURE
- PRESSURE SWITCH – CLOSE ON INC. PRESSURE
- RELAY OR MISC. CONTACT N.O.
- RELAY OR MISC. CONTACT N.C.
- RELAY OR STARTER COIL
- SOLENOID VALVE
- LED CLUSTER LAMP
  R – RED
  Y– YELLOW
  G – GREEN
- FUSE
- INDICATOR LAMP (INCANDESCENT)
  R – RED
  Y– YELLOW
  G – GREEN

RECEIVED
AUG 02 1991
H. L. WILLIAMS

CERTIFIED PRINT
R S Bl
Customer Order No. 90-00001
Shop Order No. 90-RF-171
ROSENMUND
Charlotte, N. C.

The copyright for this drawing remains Rosenmund's. The use of this drawing is strictly limited to the purposes we have agreed to in writing. It may neither be reproduced nor copied nor brought to any third party's notice without our written consent.

SOFIX P.O. #90-00001

No.	REVISION	Date	Approv.
0	CERTIFIED FOR FABRICATION	7/31/91	RSB
A	FOR APPROVAL	4/9/91	RSB

ROSENMUND INC.
CHEMICAL PROCESS EQUIPMENT
2969 INTERSTATE STREET P.O. BOX 668625
CHARLOTTE, N.C. 28266–8625

SOFIX CORPORATION
FILTER CONTROL PANELS
SCHEMATICS AND LAYOUTS

Scale	Drawn	C/CAD
NTS	Checked	RSB

DWG. No. 90–RF–171–K1

LOCAL CONTROL PANEL

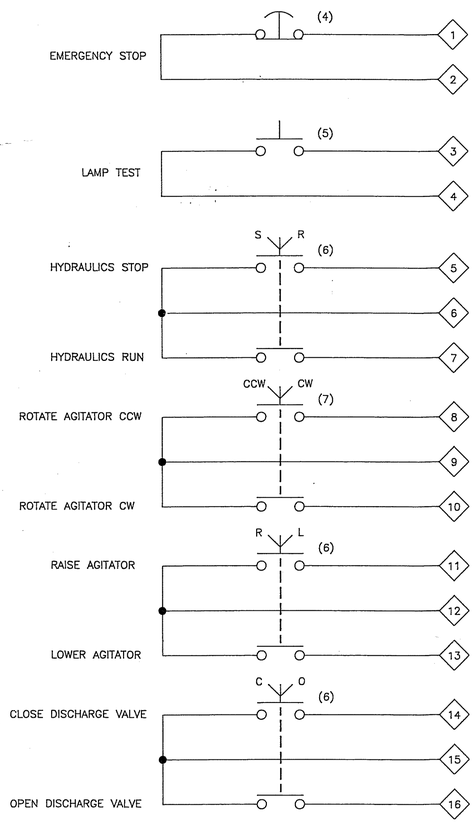

AGITATOR CONTROL PANEL

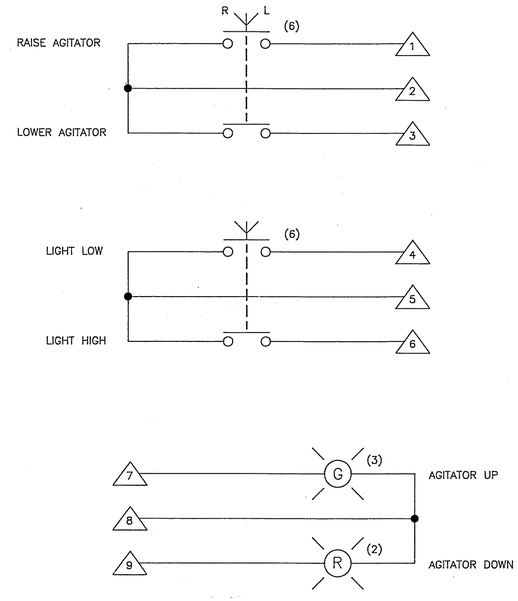

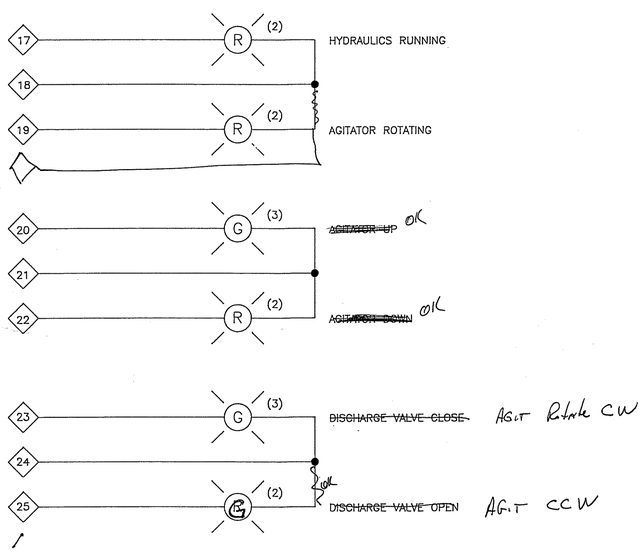

NOTE:

1. NUMBERS IN PARENTHESES REFER TO ITEM NO. IN BILL OF MATERIALS.

RECEIVED
AUG 02 1991
H. L. WILLIAMS

CERTIFIED PRINT
RS Bolch
Customer Order No. 90-00001
Shop Order No. 90-RF-171
ROSENMUND
Charlotte, N. C.

The copyright for this drawing remains Rosenmund's. The use of this drawing is strictly limited to the purposes we have agreed to in writing. It may neither be reproduced nor copied nor brought to any third party's notice without our written consent.

No.	REVISION	Date	Approv.
0	CERTIFIED FOR FABRICATION	7/31/91	RSB
A	FOR APPROVAL	4/9/91	RSB

SOFIX P.O. #90-00001

ROSENMUND INC.
CHEMICAL PROCESS EQUIPMENT
2969 INTERSTATE STREET P.O. BOX 668625
CHARLOTTE, N.C. 28266-8625

SOFIX CORPORATION

SCHEMATICS AND PANEL DRAWINGS

Scale	Drawn	C/CAD
NTS	Checked	RSB

DWG. No. 90-RF-171-K2

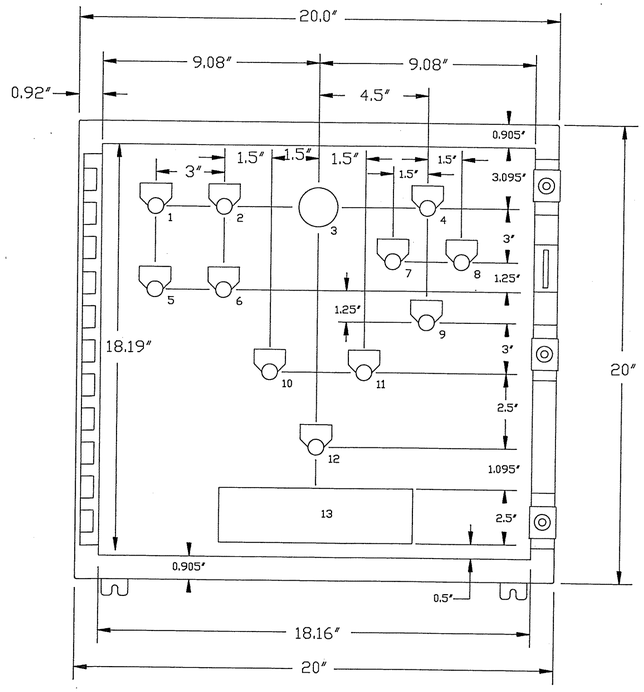

LOCAL CONTROL PANEL

INTERIOR MOUNTING PANEL
17″ H. X 17″ W.

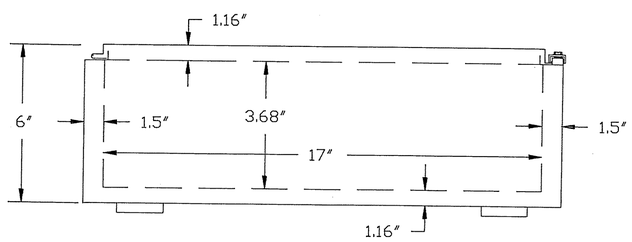

CONDUIT ENTRY AREA
(TOP & BOTTOM)

NOTE:
ENCLOSURE SIZE 20″ X 20″ X 6″
PANEL BACKPLATE - 17″ X 17″
NEMA 4X, 304 STAINLESS STEEL

LEGEND

1. 3 POS. SEL. SW. (6) N/P ENGRAVING: "HYDRAULICS / STOP-RUN"
2. RED LIGHT (2) ENGRAVING: "HYDRAULICS RUNNING"
3. PUSH - PULL SWITCH (4) N/P ENGRAVING: "EMERGENCY STOP"
4. MOMENTARY PUSHBUTTON (5) N/P ENGRAVING: "LAMP TEST"
5. 3 POS. SEL. SW. (7) N/P ENGRAVING: "AGITATOR ROTATION / CCW-STOP-CW"
6. RED LIGHT (2) N/P ENGRAVING: "AGITATOR ROTATING"
7. GREEN LIGHT (3) N/P ENGRAVING: "UP"
8. RED LIGHT (2) N/P ENGRAVING: "DOWN"
9. 3 POS. SEL. SW. (6) N/P ENGRAVING: "AGITATOR POSITION / UP-STOP-DOWN"
10. GREEN LIGHT (3) N/P ENGRAVING: "CLOSE"
11. RED LIGHT (2) N/P ENGRAVING: "OPEN"
12. 3 POS. SEL. SW. (6) N/P ENGRAVING: "DISCHARGE VALVE"
13. 6.5″ X 2.5″ ROSENMUND NAMEPLATE

NOTES:
(1) NUMBERS IN PARENTHESES REFERS TO ITEMS IN BILL OF MATERIAL

RECEIVED
AUG 02 1991
H. L. WILLIAMS

CERTIFIED PRINT
RS Blue
Customer Order No. 90-00001
Shop Order No. 90-RF-171
ROSENMUND
Charlotte, N. C.

The copyright for this drawing remains Rosenmund's. The use of this drawing is strictly limited to the purposes we have agreed to in writing. It may neither be reproduced nor copied nor brought to any third party's notice without our written consent.

SOFIX P.O. # 90-00001

No.	REVISION	Date	Approv.
0	CERTIFIED FOR FABRICATION	7/31/91	BSO
A	FOR APPROVAL	4/9/91	RSB

ROSENMUND INC.
CHEMICAL PROCESS EQUIPMENT
2969 INTERSTATE STREET P.O. BOX 668625
CHARLOTTE, N.C. 28266-8625

SOFIX CORPORATION

LOCAL CONTROL PANEL LAYOUT

Scale	Drawn	C/CAD
NTS	Checked	BSB

DWG. No. 90-RF-171-K3

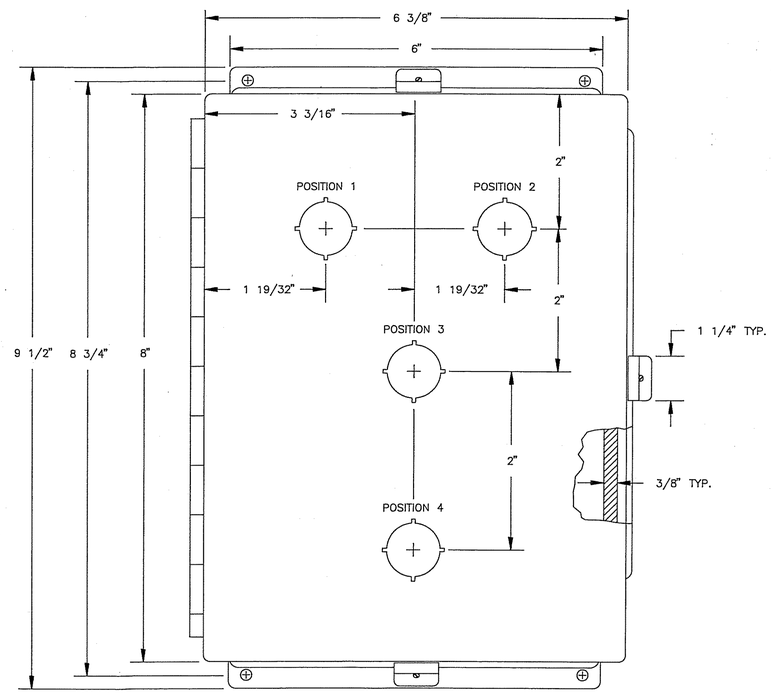

AGITATOR CONTROL PANEL LAYOUT

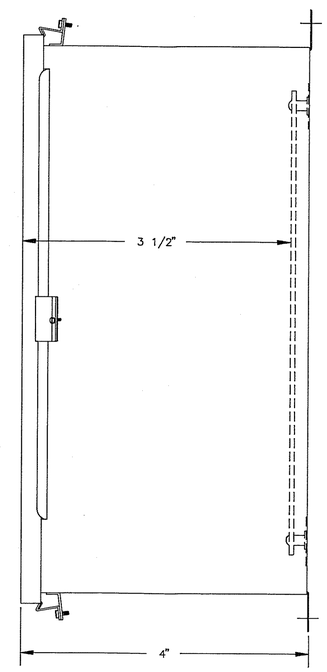

LEGEND

1. CONSTRUCTION NEMA 4X, 304 STAINLESS.

2. POSITIONS 1 THROUGH 4:
   POS. 1 - GREEN LIGHT (3), N/P ENGRAVING "UP"
   POS. 2 - RED LIGHT (2), N/P ENGRAVING "DOWN"
   POS. 3 - 3-POS. SELECTOR SWITCH (6), N/P ENGRAVING "AGITATOR POSITION/UP-STOP-DOWN"
   POS. 4 - 3-POS. SELECTOR SWITCH (6), N/P ENGRAVING "LIGHT/LO-HI"

NOTES:

(1) NUMBERS IN PARENTHESES REFERS TO ITEMS IN BILL OF MATERIAL.

RECEIVED
AUG 02 1991
H. L. WILLIAMS

CERTIFIED PRINT
RS Bled
Customer Order No. 90-00001
Shop Order No. 90-RF-171
ROSENMUND
Charlotte, N. C.

The copyright for this drawing remains Rosenmund's. The use of this drawing is strictly limited to the purposes we have agreed to in writing. It may neither be reproduced nor copied nor brought to any third party's notice without our written consent.

No.	REVISION	Date	Approv.
0	CERTIFIED FOR FABRICATION		
A	FOR APPROVAL	4/9/91	RSB

SOFIX P.O. #90-00001

ROSENMUND INC.
CHEMICAL PROCESS EQUIPMENT
2969 INTERSTATE STREET P.O. BOX 668625
CHARLOTTE, N.C. 28266-8625

SOFIX CORPORATION

AGITATOR CONTROL PANEL LAYOUT

Scale	Drawn	C/CAD
NTS	Checked	

DWG. No. 90-RF-171-K4

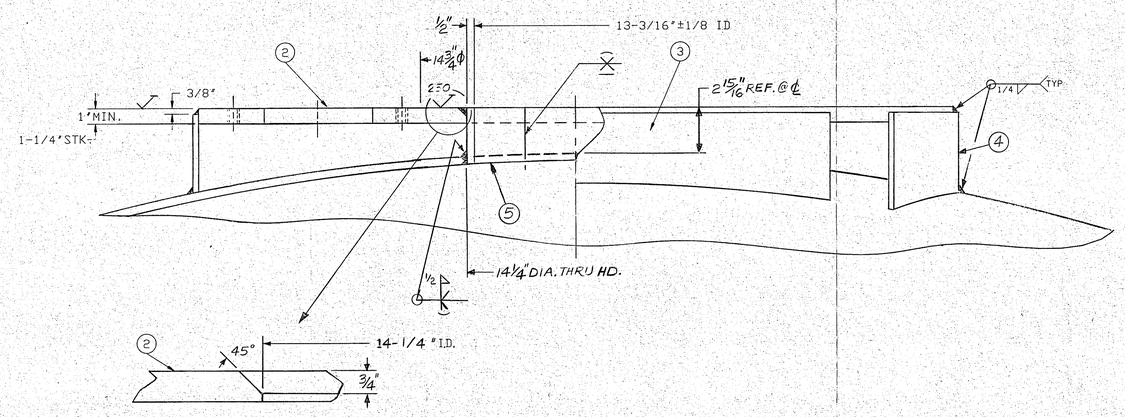

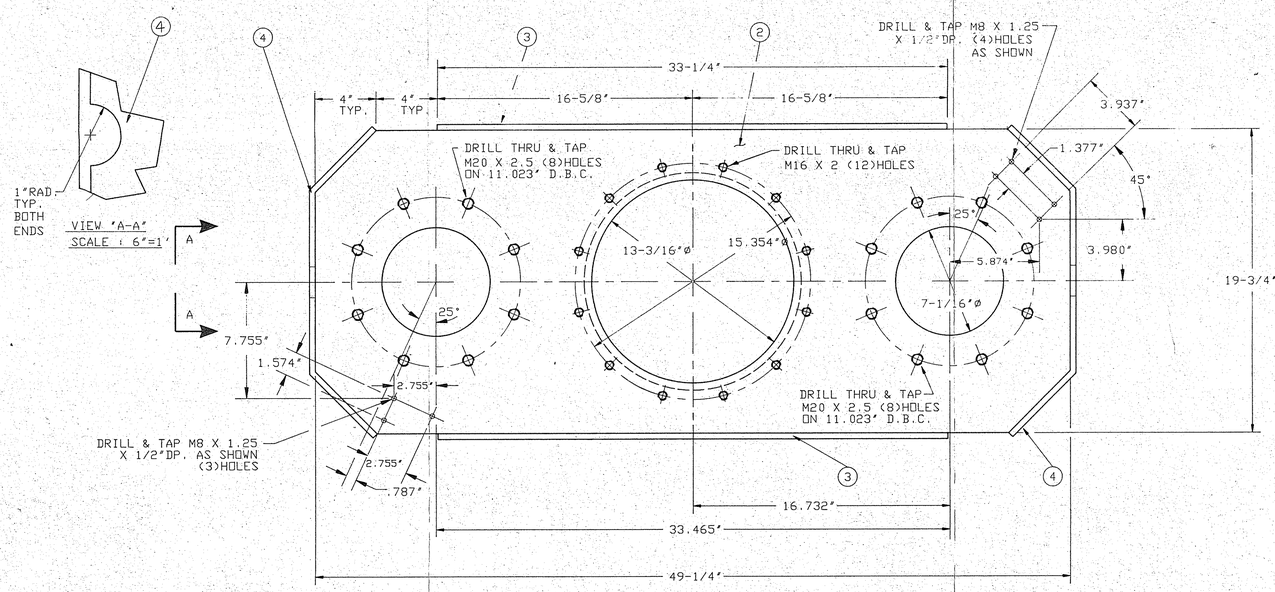

CAD REFERENCE NO.

PRINT FOR APPROVAL
Clarence S. Carroll
Customer Order No. 90.00001
Shop Order No. 90.RF.171
ROSENMUND
Charlotte, NC 2.1.91

ASME CODE

APPROVAL DATE

APPROVAL DATE

SIMONS-EASTERN CONSULTANTS, INC.
P.5262A
E-3600597 001 OF 001
SHIMIZU AMERICA CORP.
SOFIX CORPORATION
RECEIVED 06EE891 COPIES 3+1
PO 90-00001 FILE# 010
EQUIP # C-5100
REVIEWED
FOR GENERAL COMPLIANCE WITH THE DESIGN CONCEPT OF THE PROJECT AND CONTRACT DOCUMENTS. NO RESPONSIBILITY IS ASSUMED FOR CORRECTNESS DETAILS OR DETAILS.
BY DATE 2/15/91
☐ NOT ACCEPTABLE NOT RELEASED FOR PRODUCTION-REVISE AND RESUBMIT.
☐ SUBJECT TO REVISION AS INDICATED. RELEASED FOR PRODUCTION-SUBMIT CERTIFIED DRAWINGS.
☒ NO EXCEPTION TAKEN - RELEASED FOR PRODUCTION - SUBMIT CERTIFIED DRAWINGS.
☐ CERTIFIED DRAWING ACCEPTED - RELEASED FOR PRODUCTION.
☐ NOT REQUIRED BY SIMONS FOR ENGINEERING DESIGN.

GASTON COUNTY DYEING MACHINE COMPANY
CHECK PRINTS
[1] NO CORRECTIONS NOTED
[1] MAKE CORRECTIONS NOTED
[1] REVISE AND RESUBMIT
[1] REJECTED - SEE REMARKS
BY
DATE

ITEM NO.	QTY.	DESCRIPTION	MATERIAL		G.C. PART NO.	DRAWING NO.	QTY./PER.
10							
9							
8							
7							
6							
5	1	PLATE, 1/2"THK. X 4 3/4" X 43" LG.	SA-240	304	6555038		.00887
4	2	PLATE , 3/8"THK. X 6-1/2" X 23-1/4"LG.	SA-240	304	6555026		.0350
3	2	PLATE , 3/8"THK. X 6" X 33-1/4"LG.	SA-240	304	6555026		.0463
2	1	PLATE , 1-1/4"THK. X 19-3/4" X 49-1/4"LG.	SA-240	304	9120031		1
1							

BILL OF MATERIAL P/N

REV.	DESCRIPTION	DATE	BY	CHECKED	APPROVED
G					
F					
E					
D					
C					
B					
A					

RETURN TO VENDOR

GASTON COUNTY FABRICATION
A DIVISION OF GASTON COUNTY DYEING MACHINE COMPANY
STANLEY, NORTH CAROLINA 704 263-4765

SHT. OF

This shop drawing is the property of Gaston County Dyeing Machine Company and is not to be reused without written permission.

CUSTOMER ROSENMUND INC. CHARLOTTE , N.C. FOR SOFIX CORP.
TITLE AGITATOR PLATE DETAIL, 8M ROSENMUND , 304
CUSTOMER P.O. NO. 1747 CUSTOMER ITEM NO. C5100
DRAWN BY M.McINTOSH DATE 1-11-91 CHECKED BY DATE 1/24/91
SHOP ORDER NO. F-80816A NO. REQUIRED SHEET 1 OF 1
SCALE 3"=1' No.E- 3600597 REV.

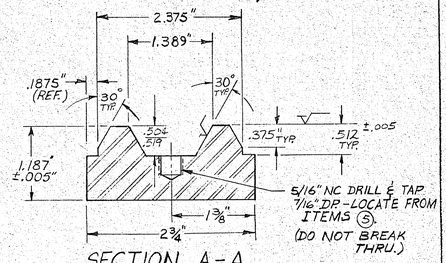

SECTION A-A

1" = 1"

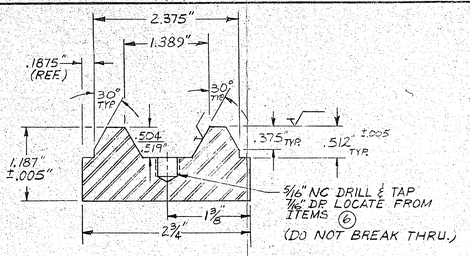

SECTION C-C

1" = 1"

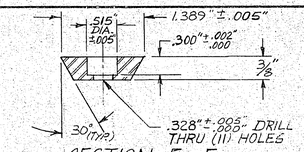

SECTION E-E

1" = 1"

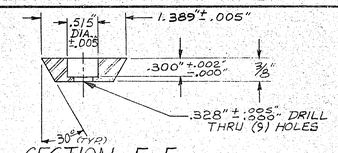

SECTION F-F

1" = 1"

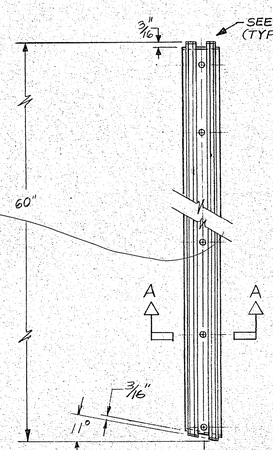

② MIDDLE BOTTOM FILTER SUPPORT

1/4" = 1"

(2) REQ'D. AS SHOWN
(2) REQ'D. OPP. HAND

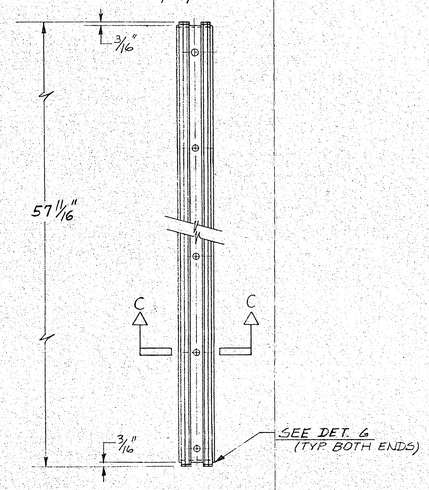

③ CENTER BOTTOM FILTER SUPPORT

1/4" = 1"

(2) REQ'D.

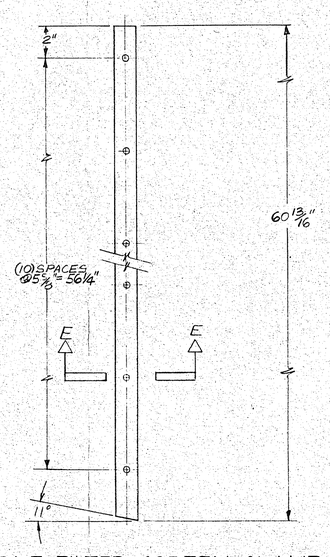

⑤ MIDDLE FILTER SCREEN CLAMP

1/4" = 1"

(2) REQ'D AS SHOWN
(2) REQ'D. OPP. HAND

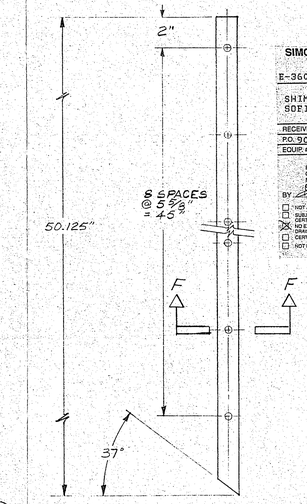

④ END FILTER SCREEN CLAMP

1/4" = 1"

(2) REQ'D. AS SHOWN
(2) REQ'D. OPP. HAND

SIMONS-EASTERN CONSULTANTS, INC.
P.5262A
E-3600596 001 OF 001
SHIMIZU AMERICA CORP.
SOFIX CORPORATION
RECEIVED 06FEB91 | COPIES 3+1
P.O. 90-00001 | REF #. 009
EQUIP. # C-5100
REVIEWED
FOR GENERAL COMPLIANCE WITH THE DESIGN CONCEPT OF THE PROJECT AND CONTRACT DOCUMENTS.
NO RESPONSIBILITY IS ASSUMED FOR CORRECTNESS OF DIMENSIONS OR DETAILS.
BY ... DATE 2/15/91
[ ] NOT ACCEPTABLE NOT RELEASED FOR PRODUCTION REVISE AND RESUBMIT
[ ] SUBJECT TO REVISION / S INDICATED. RELEASED FOR PRODUCTION SUBMIT CERTIFIED DRAWING
[X] NO EXCEPTION TAKEN - RELEASED FOR PRODUCTION - SUBMIT CERTIFIED DRAWING
[ ] CERTIFIED DRAWING ACCEPTED - RELEASED FOR PRODUCTION
[ ] NOT REQUIRED BY SWGRS FOR ENGINEERING DESIGN

GASTON COUNTY DYEING MACHINE COMPANY
CHECK-PRINT
[ ] NO CORRECTIONS NOTED
[ ] MAKE CORRECTIONS NOTED
[ ] REVISE AND RESUBMIT
[ ] REJECTED - SEE REMARKS
BY
DATE

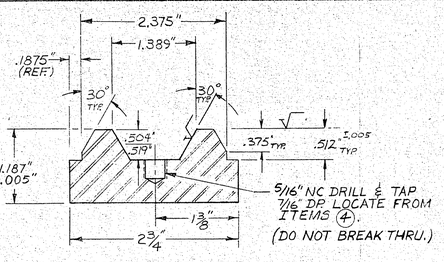

SECTION B-B

1" = 1"

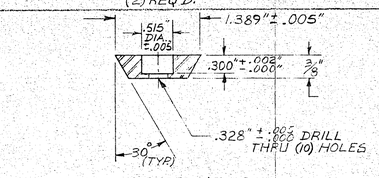

SECTION D-D

1" = 1"

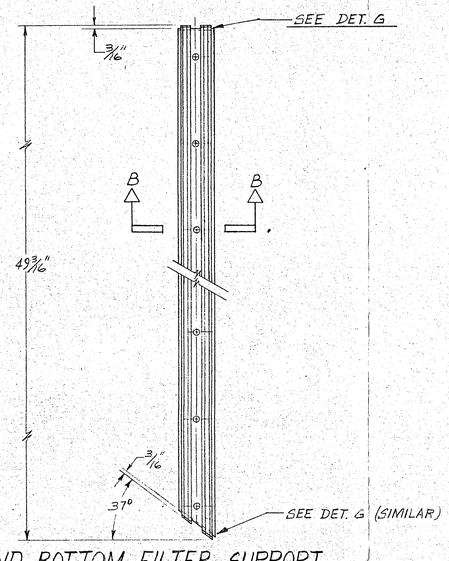

① END BOTTOM FILTER SUPPORT

1/4" = 1"

(2) REQ'D. AS SHOWN
(2) REQ'D OPP. HAND

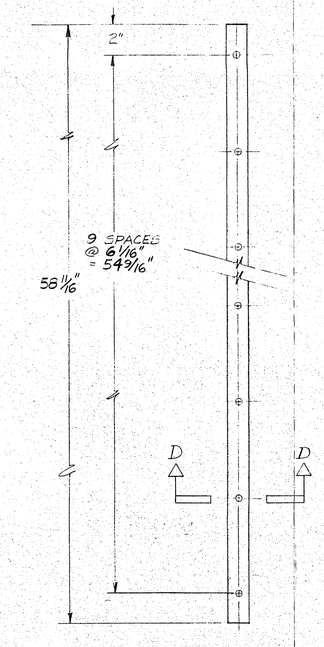

⑥ CENTER FILTER SCREEN CLAMP

1/4" = 1"

(2) REQ'D.

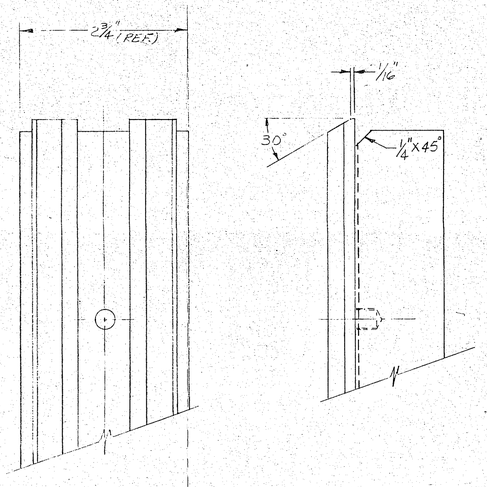

DETAIL G

1" = 1"

PRINT FOR APPROVAL
Customer Order No. 90-00001
Shop Order No. 90-KF-171
ROSENMUND Charlotte, NC 2.1.91

NO.	QTY.	SIZE	RATING	TYPE	SCH.	SERVICE/DECRIPTION

NOZZLE SCHEDULE

ITEM NO.	QTY.	DESCRIPTION	MATERIAL	G.C. PART NO.	DRAWING NO.	QTY./PER.
6	2	BAR-FLAT 3/8" THK. X 2" X 58 1/16" LG.	304	5021000		10.000
5	4	BAR-FLAT 3/8" THK. X 2" X 60 13/16" LG.	304	5021000		22.000
4	4	BAR-FLAT 3/8" THK. X 2" X 50 1/8" LG.	304	5021000		18.000
3	2	PLATE-1 1/2" THK. X 3" X 58" LG.	SA-240-304	9120030		2
2	4	PLATE-1 1/2" THK. X 3" X 60 1/2" LG.	SA-240-304	9120029		4
1	4	PLATE-1 1/2" THK. X 3" X 49 1/2" LG.	SA-240-304	9120028		4

BILL OF MATERIAL P/N

REV.	DESCRIPTION	DATE	BY	CHECKED	APPROVED
G					
F					
E					
D					
C					
B					
A					

RETURN TO VENDOR

GASTON COUNTY FABRICATION
A DIVISION OF GASTON COUNTY DYEING MACHINE COMPANY
STANLEY, NORTH CAROLINA 704 263 4765

This shop drawing is the property of Gaston County Dyeing Machine Company and is not to be reused without written permission.

CUSTOMER 8M² ROSENMUND FILTER VESSEL FOR SOFIX
TITLE SUPPORT & CLAMP BARS
CUSTOMER P.O. NO. 1747 | CUSTOMER ITEM NO. C5100
DRAWN BY M.McINTOSH DATE 2-3-91 | CHECKED BY ... DATE ...
SHOP ORDER NO. F-80816 A | NO. REQUIRED 1 | SHEET 1 OF 1
SCALE NOTED | NO. E-3600596 | REV.

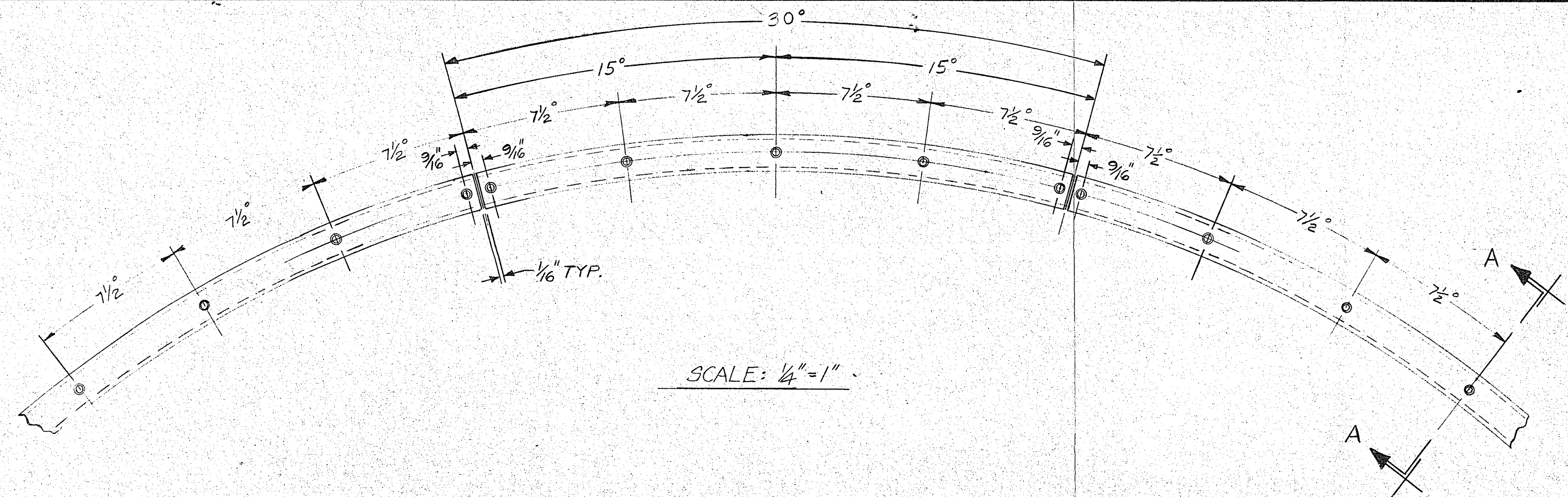

SCALE: ¼"=1"

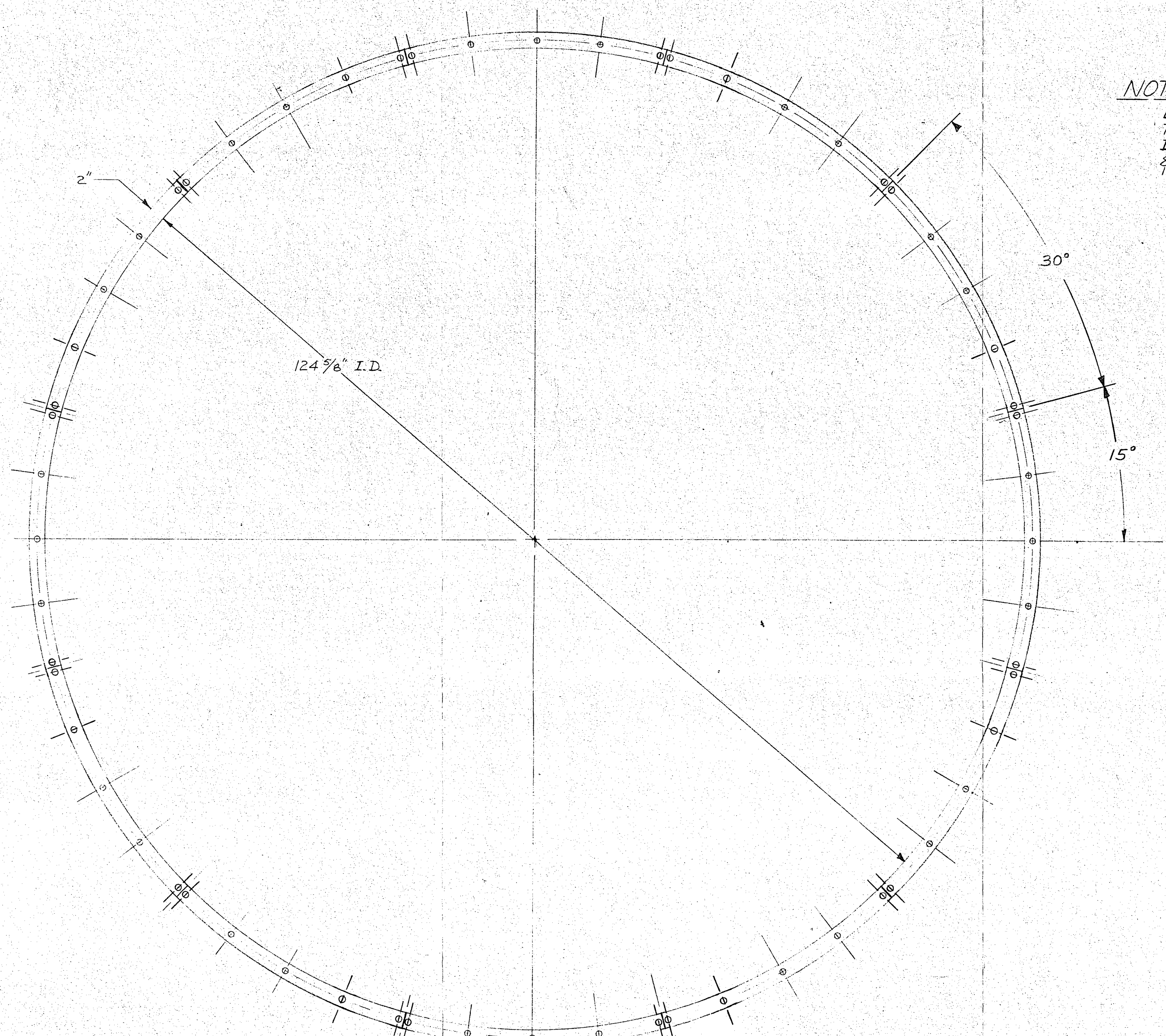

NOTE:
BURN SEGMENTS FROM PLATE TO GIVEN I.D. & O.D.-(12) SECTIONS; DRILL & C'BORE HOLES; BOLT TO JIG & MACHINE TAPERS.

SCALE: 1/8"=1"

① OUTER TIGHTENING RING

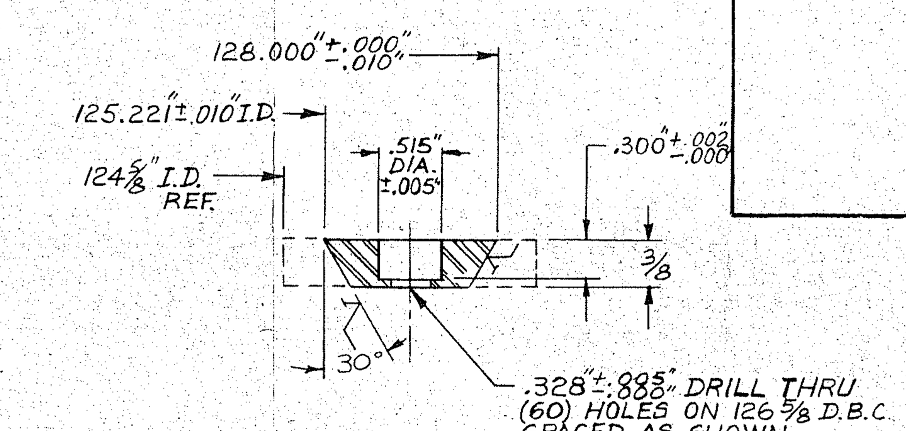

SECTION A-A
1"=1"

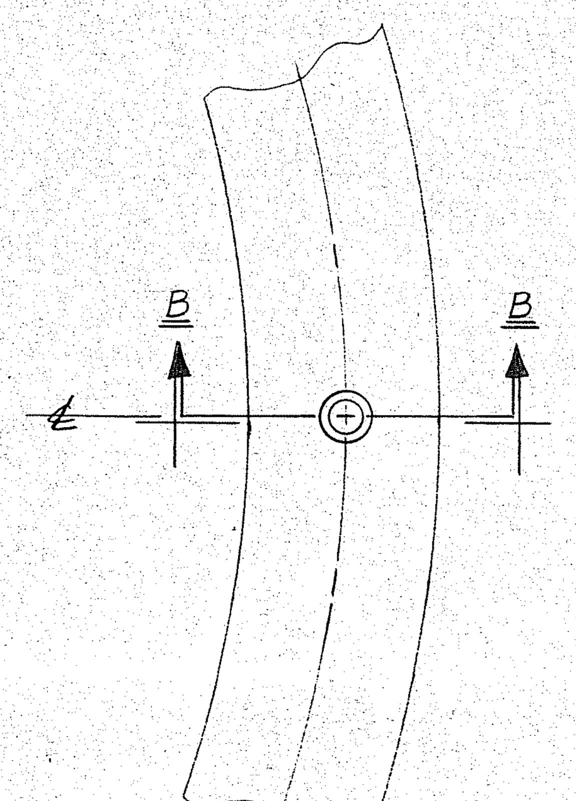

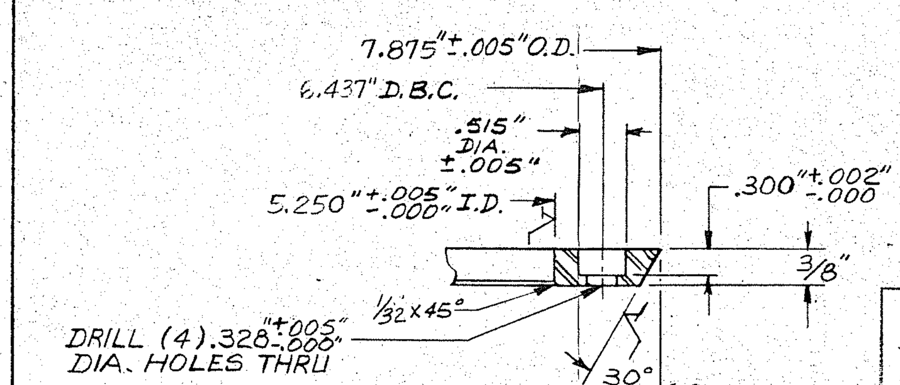

SECTION B-B

PRINT FOR APPROVAL
Customer Order No. 90-00001
Shop Order No. 90-FF-171
ROSENMUND Charlotte, NC 2.1.91

② INNER TIGHTENING RING
¾"=1"

SIMONS-EASTERN CONSULTANTS, INC.
P.5262A
E-3600595 001 OF 001
SHIMIZU AMERICA CORP.
SOFIX CORPORATION
RECEIVED 06FEB91 COPIES 3+1
P.O. 90-00001 FILE # 008
EQUIP. # C-5100
REVIEWED
FOR GENERAL COMPLIANCE WITH THE DESIGN CONCEPT OF THE PROJECT AND CONTRACT DOCUMENTS. NO RESPONSIBILITY IS ASSUMED FOR CORRECTNESS OF DIMENSIONS OR DETAILS.
BY ______ DATE 2/15/91
☐ NOT ACCEPTABLE-NOT RELEASED FOR PRODUCTION-REVISE AND RESUBMIT.
☐ SUBJECT TO REVISION AS INDICATED. RELEASED FOR PRODUCTION-SUBMIT CERTIFIED DRAWINGS.
☒ NO EXCEPTION TAKEN - RELEASED FOR PRODUCTION - SUBMIT CERTIFIED DRAWING.
☐ CERTIFIED DRAWING ACCEPTED - RELEASED FOR PRODUCTION.
☐ NOT REQUIRED BY SIMONS FOR ENGINEERING DESIGN.

GASTON COUNTY DYEING MACHINE COMPANY
CHECK PRINTS
[ ] NO CORRECTIONS NOTED
[ ] MAKE CORRECTIONS NOTED
[ ] REVISE AND RESUBMIT
[ ] REJECTED - SEE REMARKS
BY
DATE

ITEM NO.	QTY.	DESCRIPTION	MATERIAL	G.C. PART NO.	DRAWING NO.	QTY./PER.
2	1	RING, 8" O.D. +1/16 -0 x 5" I.D. ±0 1/16 x 3/8" THK.	SA-240-304	9124948		1
1	1	PLATE - 3/8" THK. X 54" X 54" LG.	SA-240-304	6555025		0.1266

BILL OF MATERIAL P/N 3600595

REV.	DESCRIPTION	DATE	BY	CHECKED	APPROVED
G					
F					
E					
D					
C					
B					
A					

RETURN TO VENDOR

NO.	QTY.	SIZE	RATING	TYPE	SCH.	SERVICE/DECRIPTION

NOZZLE SCHEDULE

GASTON COUNTY FABRICATION
A DIVISION OF GASTON COUNTY DYEING MACHINE COMPANY
STANLEY, NORTH CAROLINA 704 263-4765

This shop drawing is the property of Gaston County Dyeing Machine Company and is not to be reused without written permission.

CUSTOMER 8M² ROSENMUND FILTER VESSEL FOR SOFIX
TITLE FILTER PLATE RINGS
CUSTOMER P.O. NO. 1747 | CUSTOMER ITEM NO. C5100
DRAWN BY M. McINTOSH DATE 1-3-91 | CHECKED BY McGee DATE 1/28/91
SHOP ORDER NO. F-80816A | NO. REQUIRED | SHEET OF
SCALE NOTED | No. E-3600595 | REV.

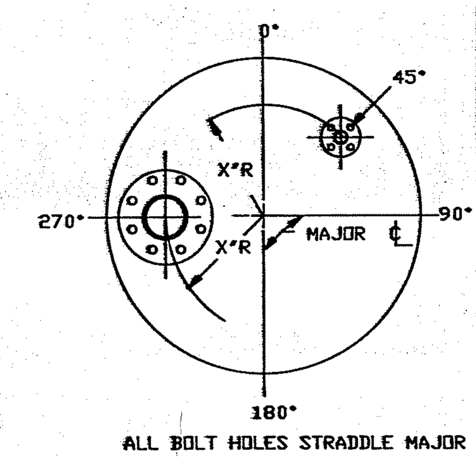

ALL BOLT HOLES STRADDLE MAJOR CENTER LINES UNLESS OTHERWISE SPECIFIED BY NOTE.

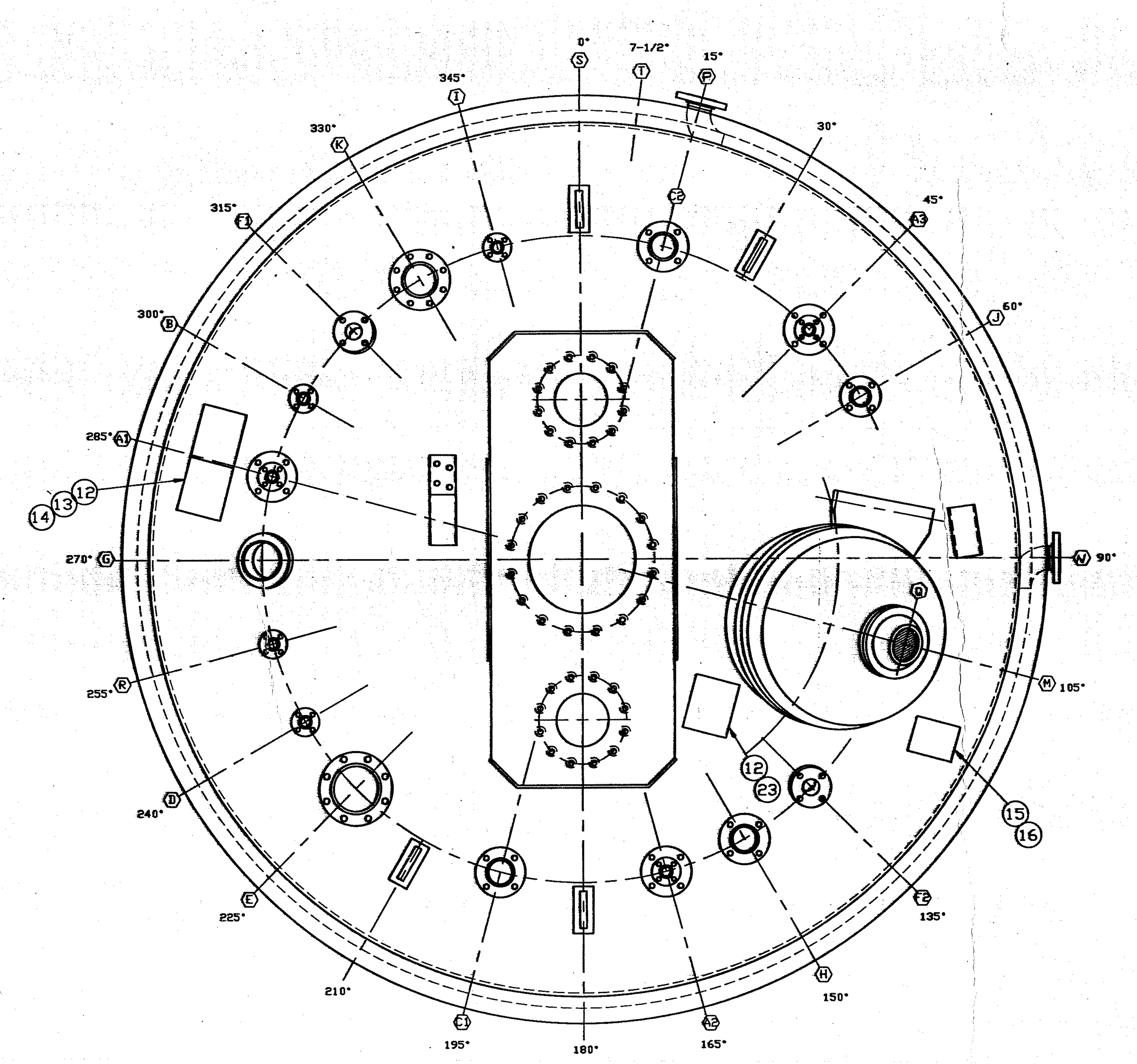

PLAN VIEW

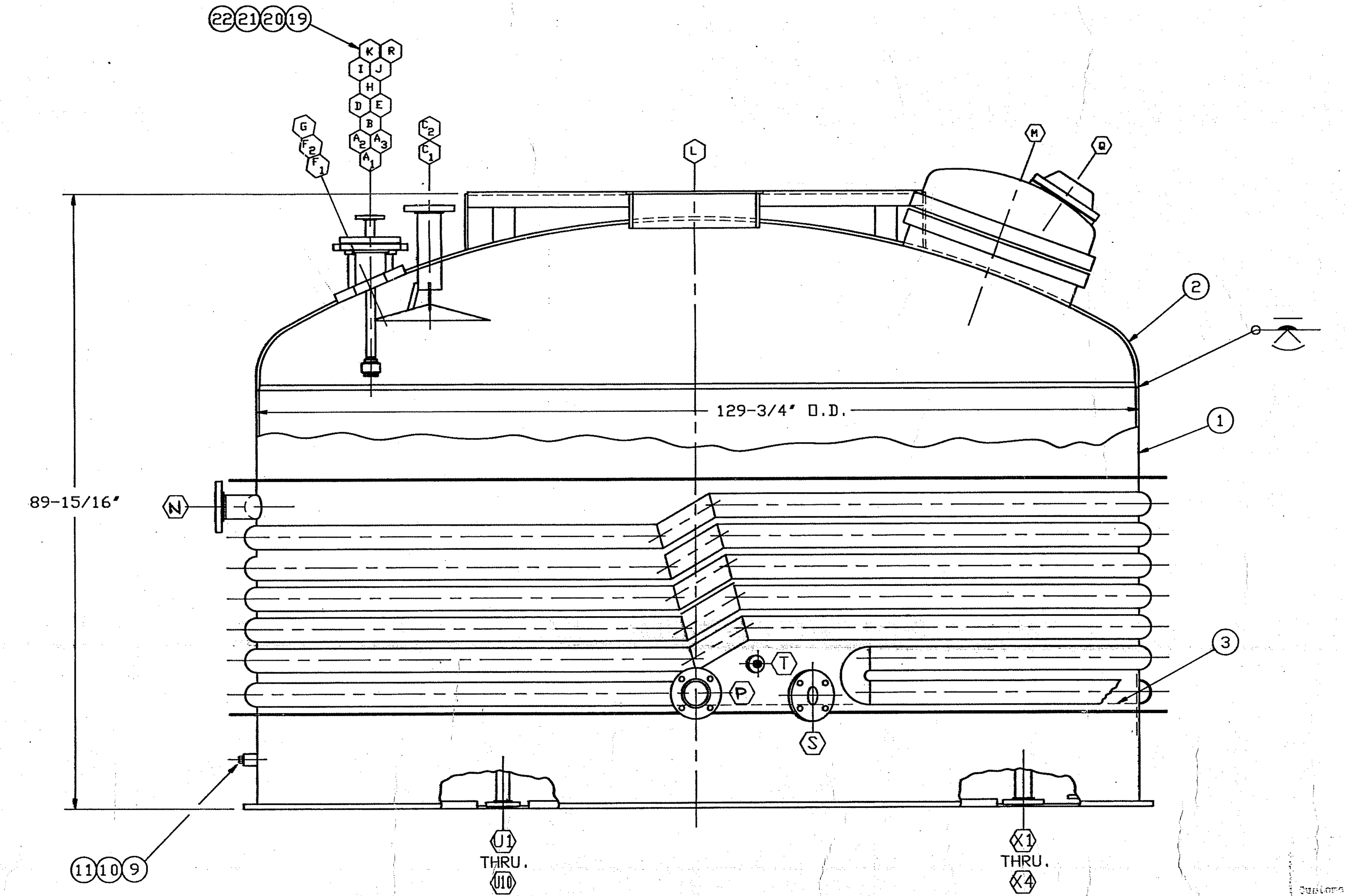

ELEVATION VIEW

SCALE: 1"=1'

ASME CODE SPECIFICATION

REVIEW ______ Date. ______ Approval: W. Mell[illegible] DATE 3/5/91

SHELLSIDE OR VESSEL	TUBESIDE OR JACKET
DESIGN CONDITIONS: 50 PSIG -20/370 °F; 30 In HG -20/370 °F	DESIGN CONDITIONS: 150 PSIG -20/370 °F; 30 In HG -20/370 °F
OPERATING CONDITIONS: ___ PSIG ___ °F; ___ In HG ___ °F	OPERATING CONDITIONS: ___ PSIG ___ °F; ___ In HG ___ °F
CORROSION ALLOWANCE NONE	CORROSION ALLOWANCE NONE
HYDROSTATIC TEST PRESSURE 75 P.S.I.G.	HYDROSTATIC TEST PRESSURE 240 P.S.I.G.
RADIOGRAPHY (SEE NOTE #9) NONE	RADIOGRAPHY NONE
POST WELD H.T. NONE	POST WELD H.T. NONE
JOINT EFF. HEAD 1.0 SHELL 0.7	JOINT EFF. HEAD ___ SHELL ___
MATERIALS	MATERIALS
SHELL: SA-240 304	SHELL: SA-240 304
HEAD: SA-240 304	HEAD:
FLANGES: SA-182 304	FLANGES: SA-182 304
BOLTING: SA-193-B7 (CAD PLATED)	BOLTING:
GASKET: TEFLON ENCAP. VITON/EPDM	GASKET:
INTERNALS: 304	INTERNALS:
SUPPORT: SA-36 C.S.	SUPPORT:
INSULATION: NONE	INSULATION:
PAINTING: SEE NOTE #8	PAINTING:

SHIPPING WEIGHT: 18000 LBS. WEIGHT FULL OF WATER: 42,000 LBS.

TRAVELER No. R3
PARA. UHA-51, USC-66(a), UG-20(f)
CALC. ASS'Y No. CA-R8-E

NOTES:

1. ALL NOZZLES TO BE COVERED PRIOR TO SHIPPING VESSEL.
2. THIS VESSEL DESIGNED FOR NON LETHAL SERVICE.
3. 1/8 NPT WEEP HOLES TO BE AT LOWEST POINT WHERE INDICATED.
4. FURNISH CUSTOMER WITH 2 SETS OF MILL TEST REPORTS.
5. REMOVE ALL BURRS, WELDS, SLAG, GREASE AND BREAK SHARP EDGES.
6. PROTECT GASKET SURFACES AND POLISHED MATERIAL SURFACES AT ALL TIMES.
7. ALL INTERIOR WELDS BELOW KR AND ABOVE FILTER PLATES TO BE FLUSH.
8. BEAD BLAST ALL EXTERIOR SURFACES AND APPLY (1) COAT OF SHERWIN-WILLIAMS E65A4 GRAY PLOLANE PRIMER-SEALER MAX MIL. DFT. AND (1) COAT OF SHERWIN-WILLIAMS POLANE B, No. F63BX-L2270-4373 (ROSENMUND BLUE No.2, MAX MIL. DFT. TO ALL C.S. SURFACES.
9. SPOT X-RAY BOTTOM HEAD E=85, FULL X-RAY TOP HD. E=1.0., SPOT X-RAY TOP HD. TO SHELL JOINT.
10. FABRICATE PER ROSENMUND SPEC.#ES-15175 REV. 3
11. SWEEP INFO: MAX. DEV.=.293, CHORD= 20.64, RADIUS=64.875
12. DESIGN PER SEISMIC ZONE 2A.
13. THE HEATED FILTER BED CHAMBER IS NOT INCLUDED IN THE CODE STAMPING AND CERTIFICATION.

Paul J. Cahill
RECEIVED
MAY 2 1991

CERTIFIED PRINT
Clarence[illegible] Cahill
Customer Order No. 90-00001
Shop Order No. 90-PF-171
ROSENMUND 4-26-91
Charlotte, N. C.

**16. BLUE #2 POLANE B.
**15. GRAY POLANE SEALER.

ITEM NO	PART NO.	DRAWING NO.	MATERIAL OR DESCRIPTION	MATERIAL SPEC	MAT'L TYPE	QTY/PER	UM
34	3600609	B-3600609	TEMPLATE-FILTER CLOTH (CENTER)	B/M		1.	EA
33	3600608	B-3600608	TEMPLATE-SUPPORTING SCREEN (CENTER)	B/M		1.	EA
32	3600607	B-3600607	TEMPLATE-METAL FILTER CLOTH (CENTER)	B/M		2	EA
31	3600606	B-3600606	TEMPLATE-FILTER CLOTH (MIDDLE)	B/M		1.	EA
30	3600605	B-3600605	TEMPLATE-SUPPORTING SCREEN (MIDDLE)	B/M		1.	EA
29	3600604	B-3600604	TEMPLATE-METAL FILTER CLOTH (MIDDLE)	B/M		2	EA
28	3600603	B-3600603	TEMPLATE-FILTER CLOTH (END)	B/M		1.	EA
27	3600602	B-3600602	TEMPLATE-SUPPORTING SCREEN (END)	B/M		1.	EA
26	3600601	B-3600601	TEMPLATE-METAL FILTER CLOTH (END)	B/M		2	EA
25			TEMPLATES 8m2 P/N 9126248				
24							
23			NAMEPLATE, ROSENMUND (FURN. BY ROSENMUND)			1.	EA
22	9115372		NUT, HEX 5/8-NC (CDA. PLATED)	SA-194-2H	CS	16	EA
21	9106282		STUD, THRD 5/8-NC X 5-1/2 LG. (CAD. PLATED)	SA-193-B7	CS	8	EA
20	9103494		GASKET, 1/8 THK. X 4-1/2 ID X 6-7/8 OD		TEF.	2	EA
19	0100460		FLANGE, BLIND 6 150# ANSI	SA-182	304	1.	EA
18	9125085		PAINT, SHERWIN-WILLIAMS #F63BX-C2277-4373 **			1 GAL.	
17	9125084		PAINT, SHERWIN-WILLIAMS #E6584 **			1 GAL.	
16	7825410		NAMEPLATE, WARNING		304	1.	EA
15	7825410	B-7825410	BRACKET, NAMEPLATE		304	1.	EA
14	7005261		NAMEPLATE, G.C.D.M.C. FAB. DIV.		304	1.	EA
13	7005273	B-7005273	NAMEPLATE, ASME		304	1.	EA
12	1604046	B-1604046	BRACKET, NAMEPLATE		304	3.	EA
11	6605912		WASHER PLAIN FLAT 1/2"		304	1.	EA
10	6605937		WASHER, LOCK 1/2"		304	1.	EA
9	6605077		BOLT, HEX 1/2"-13 NC X 1" LG.		304	1.	EA
8							
7							
6							
5							
4	9126248		TEMPLATES 8m2	B/M		1.	EA
3	3600593	E-3600593	FILTER PLATE ASSEMBLY 8m2	B/M		1.	EA
2	3600591	E-3600591	HEAD ASSEMBLY 8m2	B/M		1.	EA
1	3600590	E-3600590	BASE & SHELL ASSEMBLY 8m2	B/M		1.	EA

BILL OF MATERIAL PART NUMBER: 3600589 — * CUT LENGTH ON THIS B.O.M. FOR REFERENCE ONLY

REV.	DESCRIPTION	DATE	BY	CHECKED	APPROVED
G					
F					
E					
D					
C					
B	INTERCHANGE LETTERS N&P	4-18-91		RBM	
A	CUSTOMER CHANGES, ROTATED AGITATOR PLATE AND CHANGED NOZZ C1 & C2	2/25/91	G.M.	RBM	

No.	QTY.	SIZE	RATING	TYPE	SCHD.	SERVICE/DESCRIPTION
X1-X4	4	2"	150#	RFSO	40	BASE HEAT IN/OUT
U1-U10	10	1-1/2"	150#	RFSO	40	FILTRATE OUT
T	1	1/2"	—	—	—	THERMOWELL W/PLUG
S	1	3"	150#	PAD	40	SLURRY OUT
R	1	1"	150#	RFSO	40	HEADER VENT
Q	1	6"	150#	WELD-IN	—	SIGHTGLASS
P	1	3"	150#	RFSO	40	JACKET OUT
N	1	3"	150#	RFSO	40	JACKET IN
M	1	26-1/2"	50#	PLATE	.500	MANWAY
L	1	13-3/16"	—	—	—	AGITATOR
K	1	4"	150#	RFSO	40	SPARE W/BLIND
J	1	2"	150#	RFSO	40	STEAM
I	1	2"	150#	RFSO	40	WATER
H	1	3"	150#	RFSO	40	VENT
G	1	6"	150#	WELD-IN	—	SIGHTGLASS
F1-F2	2	2"	150#	PAD	40	LIGHT CONNECTION
E	1	6"	150#	RFSO	40	SAFETY RELIEF
D	1	1"	150#	RFSO	40	PRESSURE GAUGE
C1-C2	2	3"	150#	RFSO	40	PRODUCT INLET
B	1	1"	150#	RFSO	40	PRESSURIZATION
A1-A3	3	3/4"/3"	150#	RFSO	40	WASH-SPRAY BALLS

NOZZLE SCHEDULE

CERTIFIED PRINT
Leon Robinson 4/24/91
Customer Order No. ______
Shop Order No. ______
GASTON COUNTY DYEING MACHINE CO.
Stanley, N. C.

FABRICATION DIVISION NAMEPLATE
Serial No. F-80816A-191-1
Size 8m2 Material SA-240 304
Customer P.O. No. 1747
Item No. C-5100

GASTON COUNTY FABRICATION
A DIVISION OF GASTON COUNTY DYEING MACHINE COMPANY
STANLEY, NORTH CAROLINA 704-263-4765

This shop drawing is the property of Gaston County Dyeing Machine Company and is not to be reused without written permission.

CUSTOMER: ROSENMUND INC. CHARLOTTE, N.C. FOR SOFIX CORP.
TITLE: FINAL ASSEMBLY 8m2
CUSTOMER P.O. NO. 1747 — CUSTOMER ITEM NO. C-5100
DRAWN BY G.M. DATE 1/23/91 — CHECKED BY [illegible] DATE 1-28-91
SHOP ORDER NO. F-80816A — NO. REQUIRED 1 — SHEET 1 OF 1
SCALE 1"=12" — No. E-3600589 — REV. B

CAD REFERENCE NO. RD00152A

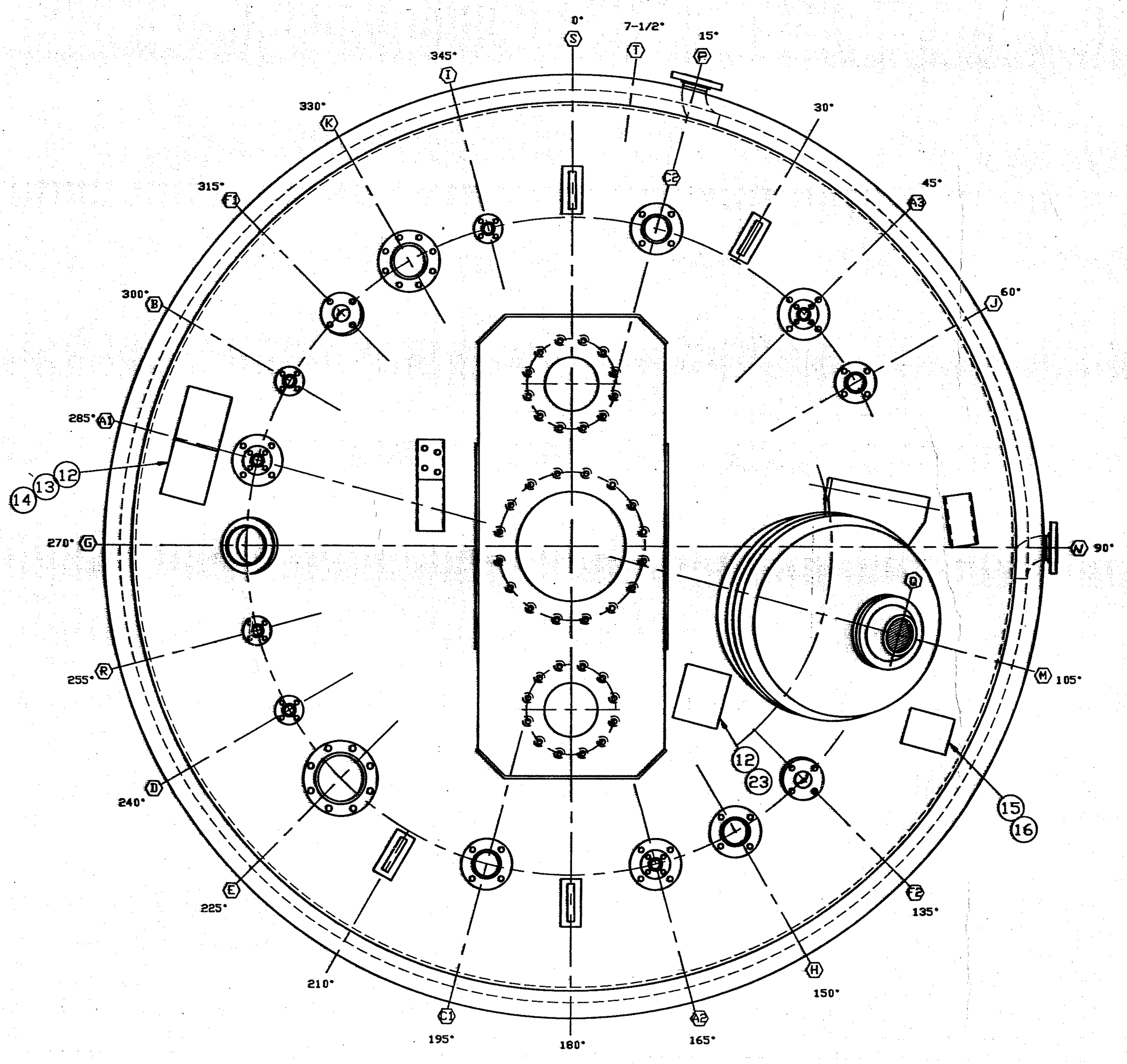

PLAN VIEW

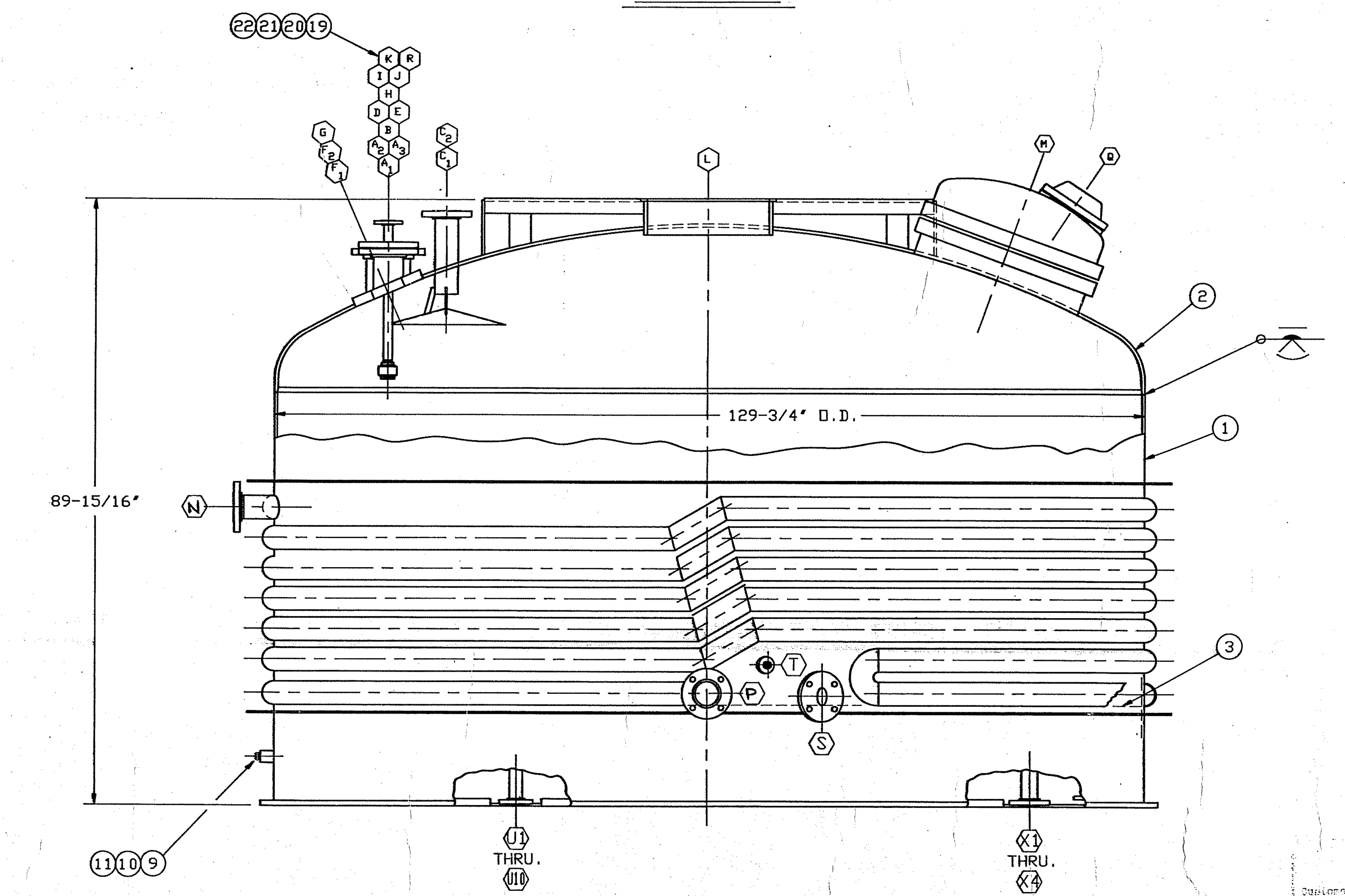

ELEVATION VIEW

SCALE: 1"=1'

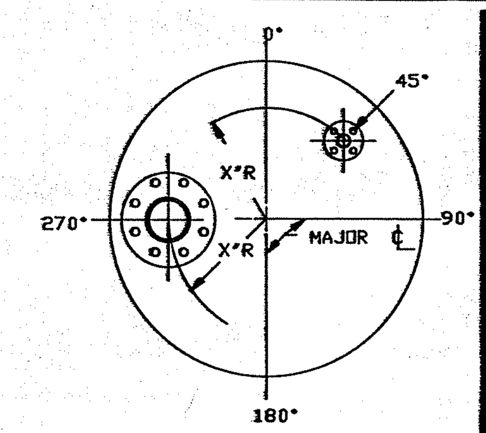

ALL BOLT HOLES STRADDLE MAJOR CENTER LINES UNLESS OTHERWISE SPECIFIED BY NOTE.

REVIEW ______ Date. ______

ASME CODE SPECIFICATION

Approval: W. Mell... DATE 3/5/91

SHELLSIDE OR VESSEL	TUBESIDE OR JACKET
DESIGN CONDITIONS: 50 PSIG -20/370 °F; 30 In HG -20/370 °F	DESIGN CONDITIONS: 150 PSIG -20/370 °F; 30 In HG -20/370 °F
OPERATING CONDITIONS: ___ PSIG ___ °F; ___ In HG ___ °F	OPERATING CONDITIONS: ___ PSIG ___ °F; ___ In HG ___ °F
CORROSION ALLOWANCE NONE	CORROSION ALLOWANCE NONE
HYDROSTATIC TEST PRESSURE 75 P.S.I.G.	HYDROSTATIC TEST PRESSURE 240 P.S.I.G.
RADIOGRAPHY (SEE NOTE #9) NONE	RADIOGRAPHY NONE
POST WELD H.T. NONE	POST WELD H.T. NONE
JOINT EFF. HEAD 1.0	JOINT EFF. HEAD
SHELL 0.7	SHELL
MATERIALS	MATERIALS
SHELL: SA-240 304	SHELL: SA-240 304
HEAD: SA-240 304	HEAD:
FLANGES: SA-182 304	FLANGES: SA-182 304
BOLTING: SA-193-B7 (CAD PLATED)	BOLTING:
GASKET: TEFLON ENCAP. VITON/EPDM	GASKET:
INTERNALS: 304	INTERNALS:
SUPPORT: SA-36 C.S.	SUPPORT:
INSULATION: NONE	INSULATION:
PAINTING: SEE NOTE #8	PAINTING:

SHIPPING WEIGHT: 18000 LBS. WEIGHT FULL OF WATER: 42,000 LBS.

TRAVELER No. R3
PARA. UHA-51, USC-66(a), UG-20(f)
CALC, ASS'Y No. CA-R8-E

NOTES:

1. ALL NOZZLES TO BE COVERED PRIOR TO SHIPPING VESSEL.
2. THIS VESSEL DESIGNED FOR NON LETHAL SERVICE.
3. 1/8 NPT WEEP HOLES TO BE AT LOWEST POINT WHERE INDICATED.
4. FURNISH CUSTOMER WITH 2 SETS OF MILL TEST REPORTS.
5. REMOVE ALL BURRS, WELDS, SLAG, GREASE AND BREAK SHARP EDGES.
6. PROTECT GASKET SURFACES AND POLISHED MATERIAL SURFACES AT ALL TIMES.
7. ALL INTERIOR WELDS BELOW KR AND ABOVE FILTER PLATES TO BE FLUSH.
8. BEAD BLAST ALL EXTERIOR SURFACES AND APPLY (1) COAT OF SHERWIN-WILLIAMS E65A4 GRAY PLOLANE PRIMER-SEALER MAX MIL. DFT. AND (1) COAT OF SHERWIN-WILLIAMS POLANE B, No. F63BX-L2270-4373 (ROSENMUND BLUE No.2, MAX MIL. DFT. TO ALL C.S. SURFACES.
9. SPOT X-RAY BOTTOM HEAD E=85, FULL X-RAY TOP HD. E=1.0., SPOT X-RAY TOP HD. TO SHELL JOINT.
10. FABRICATE PER ROSENMUND SPEC.#ES-15175 REV. 3
11. SWEEP INFO: MAX. DEV.=.293, CHORD=20.64, RADIUS=64.875
12. DESIGN PER SEISMIC ZONE 2A.
13. THE HEATED FILTER BED CHAMBER IS NOT INCLUDED IN THE CODE STAMPING AND CERTIFICATION.

Paul J. Cahill
RECEIVED
MAY 2 1991

CERTIFIED PRINT
Customer Order No. 90-00001
Shop Order No. 90-BF-171
ROSENMUND Charlotte, N.C. 4-26-91

CERTIFIED PRINT
Leary Robinson 4/24/91
Customer Order No. ______
Shop Order No. ______
GASTON COUNTY DYEING MACHINE CO.
Stanley, N. C.

**16. BLUE #2 POLANE B.
**15. GRAY POLANE SEALER.

ITEM NO	PART NO.	DRAWING NO.	MATERIAL OR DESCRIPTION	MATERIAL SPEC	MAT'L TYPE	QTY/PER	UM
34	3600609	B-3600609	TEMPLATE-FILTER CLOTH (CENTER)	B/M		1.	EA
33	3600608	B-3600608	TEMPLATE-SUPPORTING SCREEN (CENTER)	B/M		1.	EA
32	3600607	B-3600607	TEMPLATE-METAL FILTER CLOTH (CENTER)	B/M		2	EA
31	3600606	B-3600606	TEMPLATE-FILTER CLOTH (MIDDLE)	B/M		1.	EA
30	3600605	B-3600605	TEMPLATE-SUPPORTING SCREEN (MIDDLE)	B/M		1.	EA
29	3600604	B-3600604	TEMPLATE-METAL FILTER CLOTH (MIDDLE)	B/M		2	EA
28	3600603	B-3600603	TEMPLATE-FILTER CLOTH (END)	B/M		1.	EA
27	3600602	B-3600602	TEMPLATE-SUPPORTING SCREEN (END)	B/M		1.	EA
26	3600601	B-3600601	TEMPLATE-METAL FILTER CLOTH (END)	B/M		2	EA
25			TEMPLATES 8m2 P/N 9126248				
24							
23			NAMEPLATE, ROSENMUND (FURN. BY ROSENMUND)			1.	EA
22	9115372		NUT, HEX 5/8-NC (CDA. PLATED)	SA-194-2H	CS	16	EA
21	9106282		STUD, THRD 5/8-NC X 5-1/2 LG. (CAD. PLATED)	SA-193-B7	CS	8	EA
20	9103494		GASKET, 1/8 THK. X 4-1/2 ID X 6-7/8 OD		TEF.	2	EA
19	0100460		FLANGE, BLIND 6 150# ANSI	SA-182	304	1.	EA
18	9125085		PAINT, SHERWIN-WILLIAMS #F63BX-C2277-4373 **			1 GAL.	
17	9125084		PAINT, SHERWIN-WILLIAMS #E6584 **			1 GAL.	
16	7825410		NAMEPLATE, WARNING		304	1.	EA
15	7825410	B-7825410	BRACKET, NAMEPLATE		304	1.	EA
14	7005261		NAMEPLATE, G.C.D.M.C. FAB. DIV.		304	1.	EA
13	7005273	B-7005273	NAMEPLATE, ASME		304	1.	EA
12	1604046	B-1604046	BRACKET, NAMEPLATE		304	3.	EA
11	6605912		WASHER PLAIN FLAT 1/2"		304	1.	EA
10	6605937		WASHER, LOCK 1/2"		304	1.	EA
9	6605077		BOLT, HEX 1/2"-13 NC X 1" LG.		304	1.	EA
8							
7							
6							
5							
4	9126248		TEMPLATES 8m2	B/M		1.	EA
3	3600593	E-3600593	FILTER PLATE ASSEMBLY 8m2	B/M		1.	EA
2	3600591	E-3600591	HEAD ASSEMBLY 8m2	B/M		1.	EA
1	3600590	E-3600590	BASE & SHELL ASSEMBLY 8m2	B/M		1.	EA

BILL OF MATERIAL PART NUMBER 3600589

* CUT LENGTH ON THIS B.O.M. FOR REFERENCE ONLY

REV.	DESCRIPTION	DATE	BY	CHECKED	APPROVED
G					
F					
E					
D					
C					
B	INTERCHANGE LETTERS N&P	4-18-91		RBM	
A	CUSTOMER CHANGES, ROTATED AGITATOR PLATE AND CHANGED NOZZ C1 & C2	2/25/91	G.M.	RBM	

NOZZLE SCHEDULE

No.	QTY.	SIZE	RATING	TYPE	SCHD.	SERVICE/DESCRIPTION
X1-X4	4	2"	150#	RFSO	40	BASE HEAT IN/OUT
U1-U10	10	1-1/2"	150#	RFSO	40	FILTRATE OUT
T	1	1/2"	—	—	—	THERMOWELL W/PLUG
S	1	3"	150#	PAD	40	SLURRY OUT
R	1	1"	150#	RFSO	40	HEADER VENT
Q	1	6"	150#	WELD-IN	—	SIGHTGLASS
P	1	3"	150#	RFSO	40	JACKET OUT
N	1	3"	150#	RFSO	40	JACKET IN
M	1	26-1/2"	50#	PLATE	.500	MANWAY
L	1	13-3/16"	—	~	—	AGITATOR
K	1	4"	150#	RFSO	40	SPARE W/BLIND
J	1	2"	150#	RFSO	40	STEAM
I	1	2"	150#	RFSO	40	WATER
H	1	3"	150#	RFSO	40	VENT
G	1	6"	150#	WELD-IN	—	SIGHTGLASS
F1-F2	2	2"	150#	PAD	40	LIGHT CONNECTION
E	1	6"	150#	RFSO	40	SAFETY RELIEF
D	1	1"	150#	RFSO	40	PRESSURE GAUGE
C1-C2	2	3"	150#	RFSO	40	PRODUCT INLET
B	1	1"	150#	RFSO	40	PRESSURIZATION
A1-A3	3	3/4"/3"	150#	RFSO	40	WASH-SPRAY BALLS

FABRICATION DIVISION NAMEPLATE
Serial No. F-80816A-191-1
Size 8m2 Material SA-240 304
Customer P.O. No. 1747
Item No. C-5100

CAD REFERENCE NO. RD00152A

GASTON COUNTY FABRICATION
A DIVISION OF GASTON COUNTY DYEING MACHINE COMPANY
STANLEY, NORTH CAROLINA 704-263-4765

This shop drawing is the property of Gaston County Dyeing Machine Company and is not to be reused without written permission.

CUSTOMER ROSENMUND INC. CHARLOTTE, N.C. FOR SOFIX CORP.

TITLE FINAL ASSEMBLY 8m2

CUSTOMER P.O. NO. 1747 | CUSTOMER ITEM NO. C-5100

DRAWN BY G.M. DATE 1/23/91 | CHECKED BY [signature] DATE 1-28-91

SHOP ORDER NO. F-80816A | NO. REQUIRED 1 | SHEET 1 OF 1

SCALE 1"=12' | No. E-3600589 | REV. B