HMD KONTRO Sealless Pumps

GENERAL ARRANGEMENT DRAWING (GAD)

CLIENT	:	Air Products Manufacturing LLC
PROJECT NAME/NO.	:	WEP Renewables
CLIENT PO NO	:	4505605360
HMD DOCUMENT NO	:	HMD-4505605360-B01-07
CLIENT DOCUMENT NO	:	EN207122-SNDYN-9V3-00013
HMD PUMP NO	:	840055 & 840056
EQUIPMENT TAG NO	:	18-P-257 A/S

4	12/05/2023	ISSUE FOR REVIEW	AFS	AFS	ARM
3	02/05/2023	ISSUE FOR REVIEW	ARM	KCM	AFS
2	10/10/2022	ISSUE FOR REVIEW	ARM	BG	AFS
1	01/09/2022	ISSUE FOR REVIEW	ARM	KCM	AFS
0	16/05/2022	ISSUE FOR REVIEW	ARM	BG	AFS
REV	DATE	DESCRIPTION	PREPARED BY	CHECKED BY	APPROVED BY

NOTE:

RESOLUTION SHEET

Comment Number	Document Name: General Arrangement Drawing		Revision from which comment first appeared	Comment Status: Open\Closed - (Date Closed:)
	CLIENT COMMENT	HMD RESPONSE	Current Rev:	
1	-	GA Drawing has been updated as per recent Change Order to add orifice plates to the pumps.	N/A	Closed (02/05/2023)
1	-	GA Drawing has been updated to include orifice plate detials.	N/A	Closed (12/05/2023)

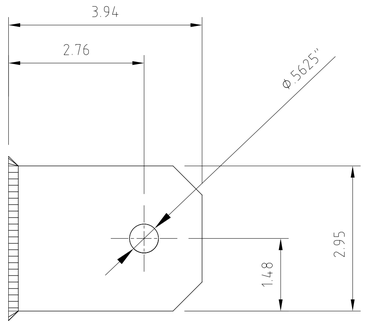

EARTHING PLATE DETAIL
(1/4" THICK - MATERIAL 316L STAINLESS STEEL)
SCALE 1:2

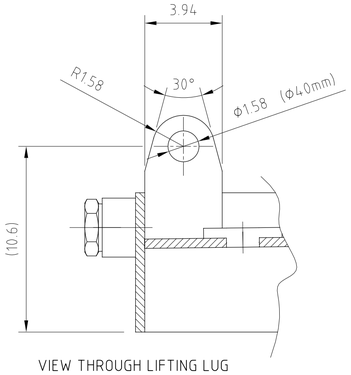

VIEW THROUGH LIFTING LUG
IN 4 PLACES
(SCALE 1:5)

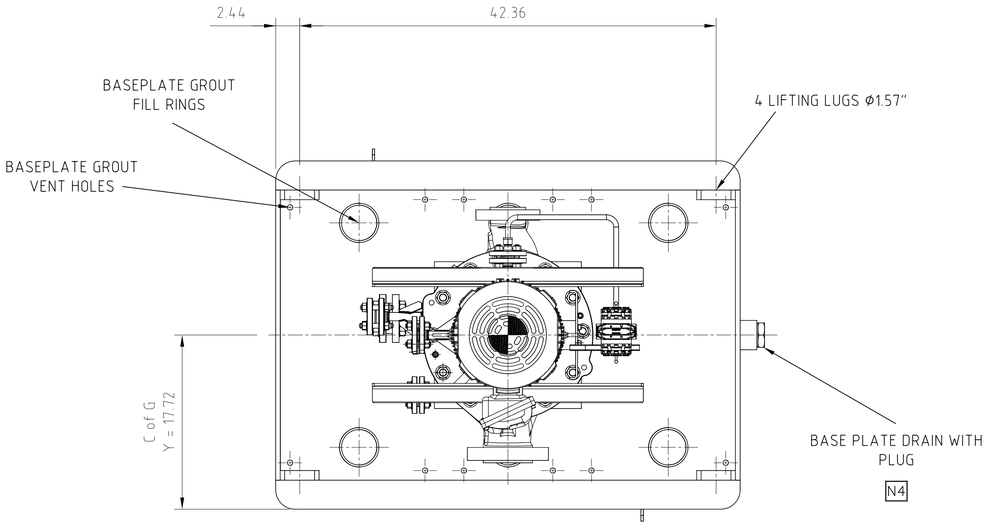

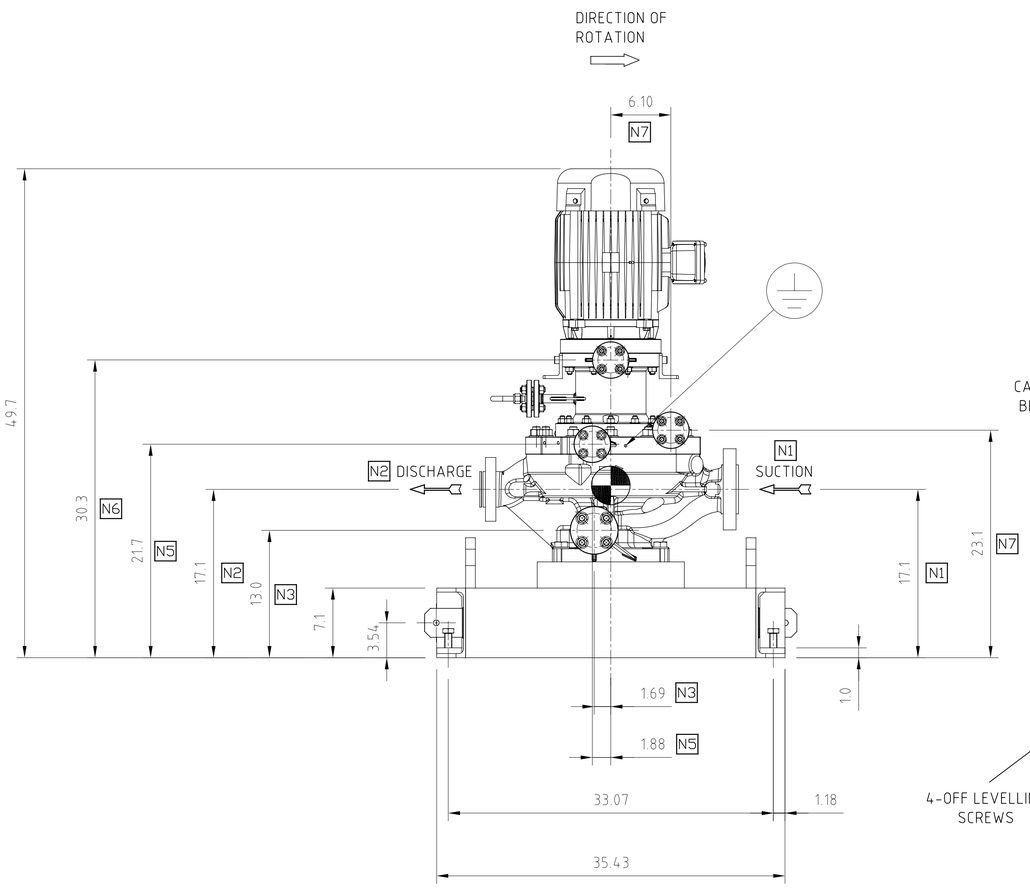

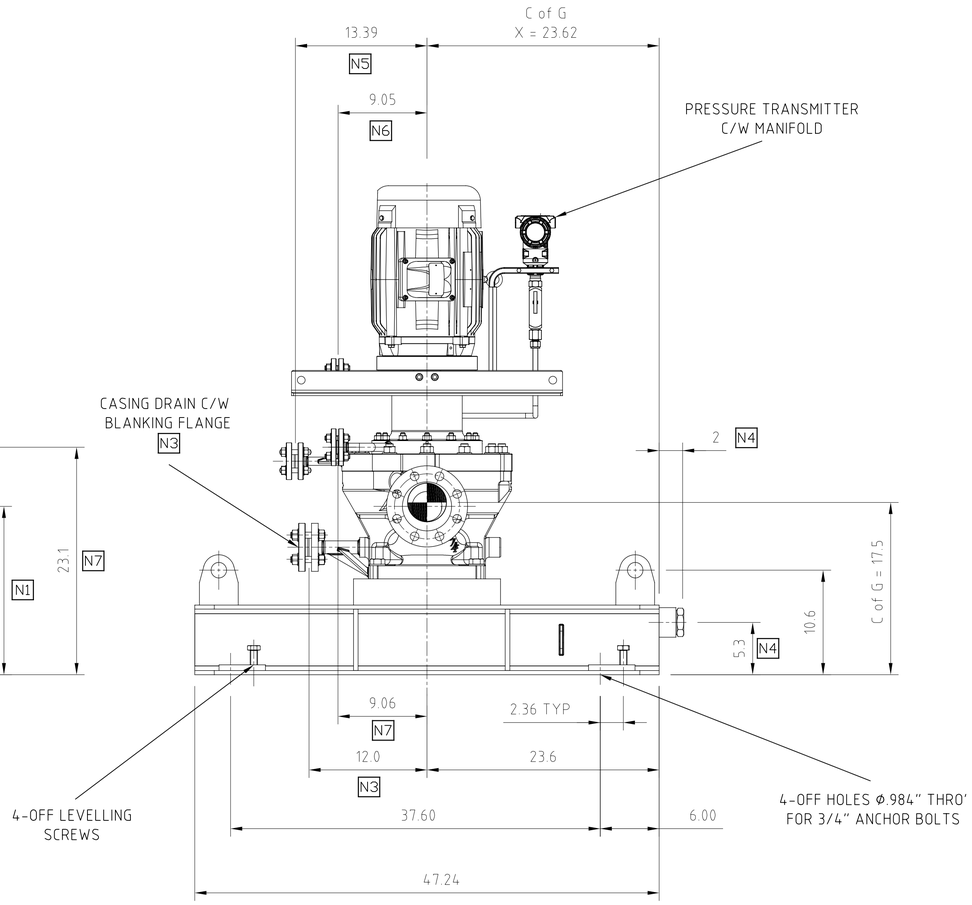

ALL DIMENSIONS IN INCHES U.O.S

Sundyne
HMD Kontro
HMD Sealless Pumps
Hampden Park Industrial Estate,
Eastbourne,
East Sussex,
BN22 9AN, England.
UK Tel: +44(0) 1323 452000
UK Fax: +44(0) 1323 503369
USA (Toll free) 888 504 8304

HYDRAULIC	CONNECTIONS			
	ITEM	SIZE	DESCRIPTION	SERVICE
HPLMV801 3 X 2 X 7N	N1	3"	ASME B16.5 600lb RF	SUCTION
	N2	2"	ASME B16.5 600lb RF	DISCHARGE
	N3	1"	ASME B16.5 600lb RF	CASING DRAIN
	N4	2"	NPT	BASEPLATE DRAIN
	N5	1/2"	ASME B16.5 600lb RF	CONTAINMENT SHELL VENT
	N6	1/2"	ASME B16.5 300lb RF	C'HSG VENT
	N7	3/4"	ASME B16.5 300lb RF	C'HSG DRAIN

	ALLOWABLE PIPING LOADS APPLIED TO NOZZLES (CONFORMS TO API 685)	2"	3"
	FORCES (lbf)		
SUCTION	FX		480
SUCTION	FY		600
SUCTION	FZ		400
SUCTION	FR		860
DISCHARGE	FX	320	
DISCHARGE	FY	400	
DISCHARGE	FZ	260	
DISCHARGE	FR	580	
	MOMENTS (ft.lbf)		
BOTH	MX	680	1400
BOTH	MY	340	700
BOTH	MZ	520	1060
BOTH	MR	920	1900

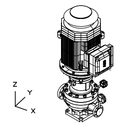

NOTE:
PUMP PRESSURE CASINGS ARE DESIGNED FOR TWICE THE VALUES STATED IN TABLE 4A (4B) OF API 685, 2nd EDITION. THIS IS NOT APPLICABLE TO PIPING DESIGN NOZZLE LOADS WHICH ARE AS PER TABLE 4A (4B). VALUES STATED ARE -/+ ABOUT 0

ELECTRIC MOTOR DETAILS

MANUFACTURER	BALDOR
RATING/FRAME	7.5 HP / 215 TC
ENCLOSURE	Cl.1 Div.2 Gr.A,B,C,D T3C
SUPPLY/SPEED	460 V / 3~ / 60 Hz / 1780 RPM

	DRY	OPERATING
WEIGHTS	(lb)	
PUMP	756	766
MOTOR	211	211
BASEPLATE	712	712
ANCILLARIES	22	22
TOTAL	1701	1711

PROJECTION

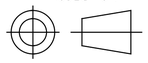

NOTES:

NOTE 1	MAXIMUM MAINTENANCE WEIGHTS ARE THE SAME AS DRY.
NOTE 2	STRAIGHT LINE PIPING BEFORE THE SUCTION N1, SHOULD BE 5x PIPE DIAMETER STRAIGHT LINE PIPING AFTER THE DISCHARGE N2, SHOULD BE 3x PIPE DIAMETER
NOTE 3	MAINTENANCE SPACE AROUND PUMP SHOULD BE 18-36" ON A MINIMUM OF ONE SIDE AND SUFFICIENT SPACE TO REMOVE THE PUMP OR MOTOR TO THE SIDE. HEIGHT ABOVE THE BASEPLATE SHALL ALLOW REMOVAL OF PUMP OR MOTOR WITH SITE LIFTING EQUIPMENT.

EQUIPMENT OWNER AIR PRODUCTS MANUFACTURING LLC

CLIENT	WORLD ENERGY PARAMOUNT
ORDER NUMBER	4505605360
ITEM NUMBER	18-P-257
HMD PUMP NUMBER	840055

ISS	DATE	CHANGE	AUTH
3	02/05/2023	ISSUE FOR REVIEW	AFS
2	10/10/2022	ISSUE FOR REVIEW	AFS
1	01/09/2022	ISSUE FOR REVIEW	AFS

CONTRACTS ISSUE NUMBER

INTERNAL USE ONLY

ISS	DATE	CHANGE NUMBER	DRN	CHK
04	21/04/23	CN2023/093	ARM	KCM
03	10/10/22	CN2022/242	ARM	BG
02	02/08/22	CN2022/184	ARM	KCM
01	12/05/22	INITIAL ISSUE	ARM	BG

ENGINEERING ISSUE NUMBER

GENERAL ARRANGEMENT DRAWING

TITLE: LMV-801S DA1 ZL (40 Bar)
SUBTITLE: SECONDARY CONTAINMENT, API DRAIN PAN, 215 TC MOTOR

DRAWING NUMBER X13750

ISSUE: 04 | REVISION: | SHEET No. 1 OF 2 | SCALE 1:10 | A2

©2022 HMD Sealless Pumps Ltd. This document contains proprietary information of HMD Sealless Pumps Ltd. Neither receipt nor possession thereof confers any rights to reproduce, or use, or disclose, in whole or in part, any such information without written permission from HMD Sealless Pumps Ltd.

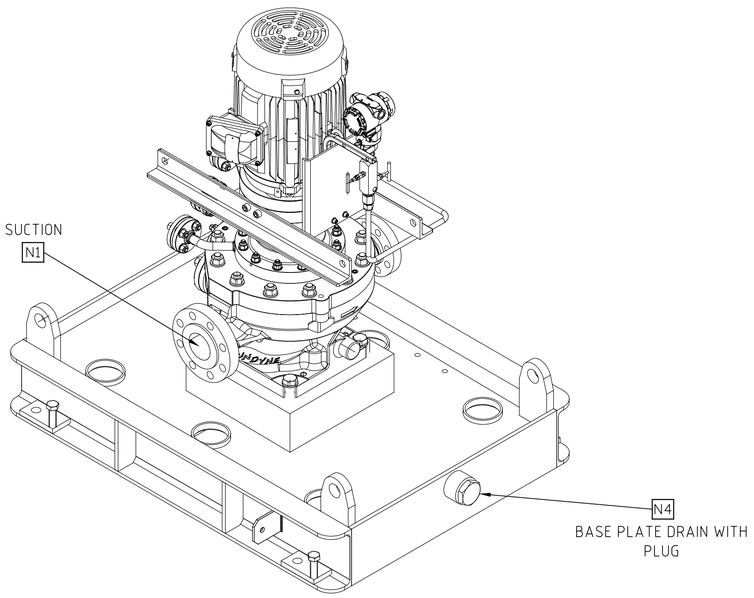

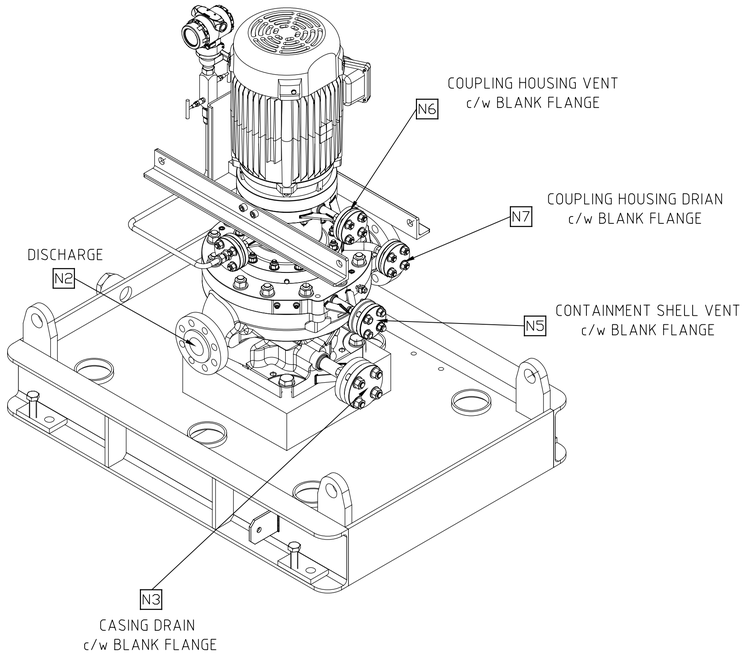

LIFTING EQUIPMENT

LIFTING BRACKETS AND FASTENERS ARE SUPPLIED WITH EACH PUMP. LIFTING BRACKETS MUST BE REMOVED AFTER INSTALLATION AND FASTENERS MUST BE RE-FITTED TO PUMP FOR STORAGE.

LIFTING BRACKETS USED TO LIFT CARTRIDGE AND MOTOR FOR MAINTENANCE ONLY.
N.B.! NOT TO BE USED TO LIFT PUMP AND BASEPLATE

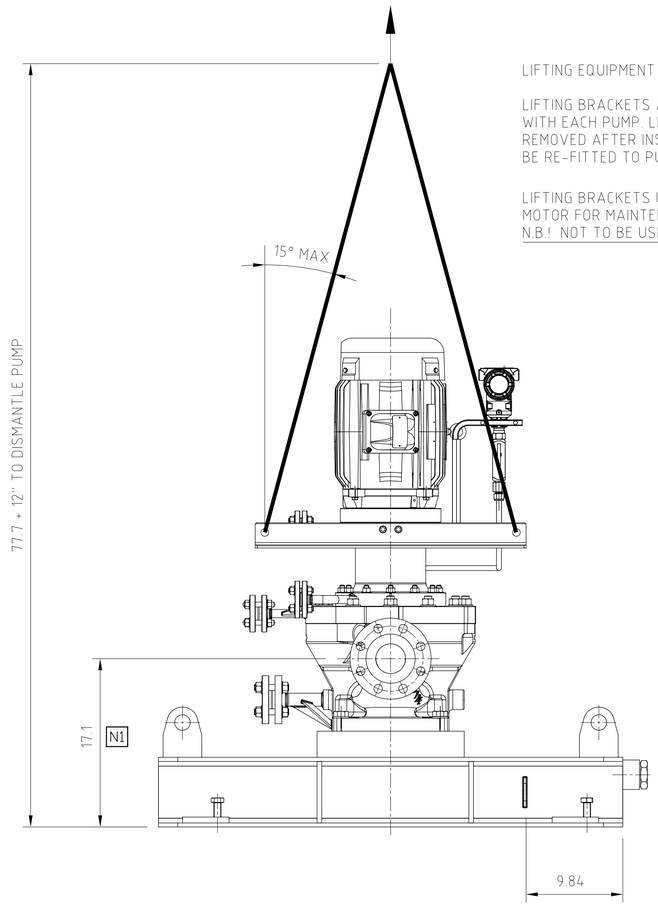

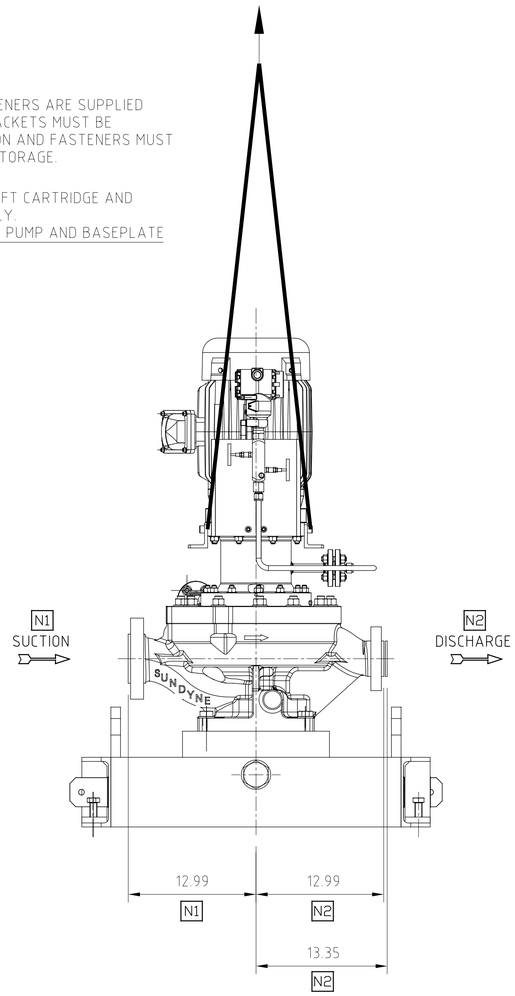

ORIFICE PLATE + 1/8" JOINT THICKNESS

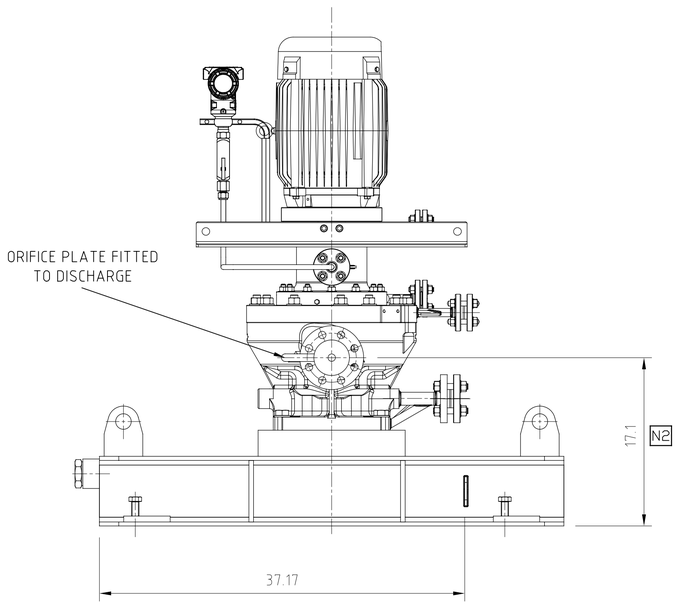

ALL DIMENSIONS IN INCHES U.O.S

Sundyne
HMD Kontro
HMD Sealless Pumps
Hampden Park Industrial Estate,
Eastbourne,
East Sussex,
BN22 9AN, England.
UK Tel: +44(0) 1323 452000
UK Fax: +44(0) 1323 503369
USA (Toll free) 888 504 8304

HYDRAULIC	ITEM	SIZE	CONNECTIONS DESCRIPTION	SERVICE
HPLMV801 3 X 2 X 7N	N1	3"	ASME B16.5 600lb RF	SUCTION
	N2	2"	ASME B16.5 600lb RF	DISCHARGE
	N3	1"	ASME B16.5 600lb RF	CASING DRAIN
	N4	2"	NPT	BASEPLATE DRAIN
	N5	1/2"	ASME B16.5 600lb RF	CONTAINMENT SHELL VENT
	N6	1/2"	ASME B16.5 300lb RF	C'HSG VENT
	N7	3/4"	ASME B16.5 300lb RF	C'HSG DRAIN

ALLOWABLE PIPING LOADS APPLIED TO NOZZLES (CONFORMS TO API 685)

		2"	3"
	FORCES (lbf)		
SUCTION	FX		480
	FY		600
	FZ		400
	FR		860
DISCHARGE	FX	320	
	FY	400	
	FZ	260	
	FR	580	
	MOMENTS (ft.lbf)		
BOTH	MX	680	1400
	MY	340	700
	MZ	520	1060
	MR	920	1900

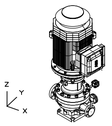

NOTE:
PUMP PRESSURE CASINGS ARE DESIGNED FOR TWICE THE VALUES STATED IN TABLE 4A (4B) OF API 685, 2nd EDITION.
THIS IS NOT APPLICABLE TO PIPING DESIGN NOZZLE LOADS WHICH ARE AS PER TABLE 4A (4B).
VALUES STATED ARE -/+ ABOUT 0

ELECTRIC MOTOR DETAILS

MANUFACTURER	BALDOR
RATING/FRAME	7.5 HP / 215 TC
ENCLOSURE	Cl.1 Div.2 Gr.A,B,C,D T3C
SUPPLY/SPEED	460 V / 3~ / 60 Hz / 1780 RPM

	DRY	OPERATING
WEIGHTS	(lb)	
PUMP	756	766
MOTOR	211	211
BASEPLATE	712	712
ANCILLARIES	22	22
TOTAL	1701	1711

PROJECTION

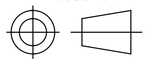

NOTES:

NOTE 1	MAXIMUM MAINTENANCE WEIGHTS ARE THE SAME AS DRY.
NOTE 2	STRAIGHT LINE PIPING BEFORE THE SUCTION N1, SHOULD BE 5x PIPE DIAMETER STRAIGHT LINE PIPING AFTER THE DISCHARGE N2, SHOULD BE 3x PIPE DIAMETER
NOTE 3	MAINTENANCE SPACE AROUND PUMP SHOULD BE 18-36" ON A MINIMUM OF ONE SIDE AND SUFFICIENT SPACE TO REMOVE THE PUMP OR MOTOR TO THE SIDE. HEIGHT ABOVE THE BASEPLATE SHALL ALLOW REMOVAL OF PUMP OR MOTOR WITH SITE LIFTING EQUIPMENT.

EQUIPMENT OWNER AIR PRODUCTS MANUFACTURING LLC

CLIENT	WORLD ENERGY PARAMOUNT
ORDER NUMBER	4505605360
ITEM NUMBER	18-P-257
HMD PUMP NUMBER	840055

ISS	DATE	CHANGE	AUTH
3	02/05/2023	ISSUE FOR REVIEW	AFS
2	10/10/2022	ISSUE FOR REVIEW	AFS
1	01/09/2022	ISSUE FOR REVIEW	AFS

CONTRACTS ISSUE NUMBER

INTERNAL USE ONLY

ISS	DATE	CHANGE NUMBER	DRN	CHK
04	21/04/23	CN2023/093	ARM	KCM
03	10/10/22	CN2022/242	ARM	BG
02	02/08/22	CN2022/184	ARM	KCM
01	12/05/22	INITIAL ISSUE	ARM	BG

ENGINEERING ISSUE NUMBER

GENERAL ARRANGEMENT DRAWING

TITLE: LMV-801S DA1 ZL (40 Bar)

SUBTITLE: SECONDARY CONTAINMENT, API DRAIN PAN, 215 TC MOTOR

DRAWING NUMBER X13750

ISSUE: 04 | REVISION: | SHEET No. 2 OF 2

SCALE 1:10 | A2

©2022 HMD Sealless Pumps Ltd. This document contains proprietary information of HMD Sealless Pumps Ltd. Neither receipt nor possession thereof confers any rights to reproduce, or use, or disclose, in whole or in part, any such information without written permission from HMD Sealless Pumps Ltd.

Orifice Plate Details:

DO NOT SCALE | IF IN DOUBT ASK

FLANGE SIZE	300lb		600lb		900lb		1500lb	
	D	L	D	L	D	L	D	L
1"	73	145	73	145	79.5	155	79.5	155
1.5"	95	160	95	160	98.5	170	98.5	170
2"	111	165	111	165	143	190	143	190
3"	149	185	149	185	168	200	174.5	215
4"	181	210	193.5	220	206.5	225	209.5	235
6"	250.5	240	266.5	260	289	270	282.5	280
8"	308	260	320.5	290	358.5	315	352.5	325

NOTES:-
1. THE COMPONENT IS DRAWN TO 2" 300lb SIZE
2. REF ✓ GASKET FACE SURFACE FINISH TO BE A SERRATED SPIRAL WITH RESULTANT SURFACE FINISH OF 3.2 um USE A 1.5mm RADIUS TOOL TO PRODUCE 2 GROOVES/mm
3. DIAMETER D TO BE EQUAL TO THE OUTSIDE DIAMETER OF CENTRING RING OF A SPRIAL WOUND GASKET ROUNDED DOWN TO THE NEAREST 0.5mm
4. RE DRILL AT PUMP PERFORMANCE TEST STAGE TO SUIT PERFORMANCE REQUIRED.

ORIFICE PLATE FOR 18-P-257

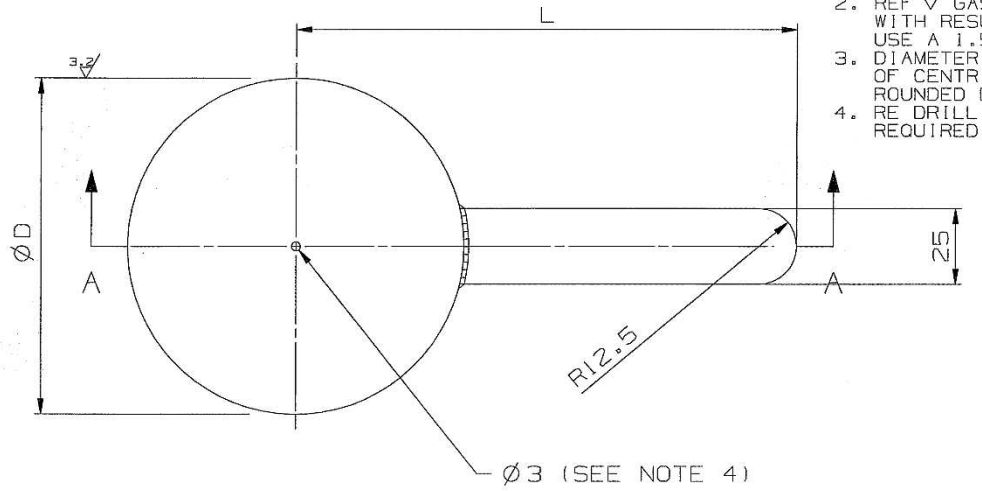

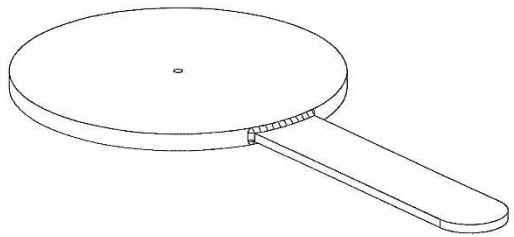

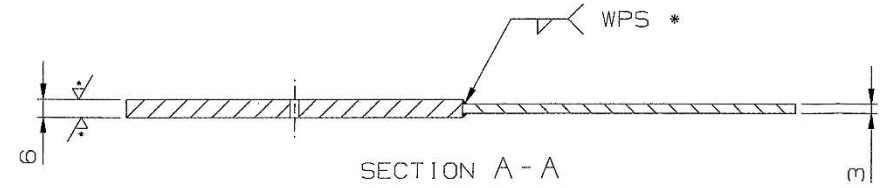

ISSUE	DATE	CHANGE NUMBER	DRN	CHK
2	08/12/2010	CN2010/393	CA	
1	01/09/08	INITIAL ISSUE	MO	NW

HMD Sealless Pumps
Hampden Park Industrial Estate, Eastbourne, Sussex, BN22 9AN, England
Tel +44(0) 1323 652000
Fax +44(0) 1323 503369
In USA (Toll free) 888 504 8304

©2008 HMD Sealless Pumps Ltd
THIS DOCUMENT CONTAINS PROPRIETARY INFORMATION OF HMD SEALLESS PUMPS LTD NEITHER RECEIPT NOR POSSESSION THEREOF CONFERS ANY RIGHTS TO REPRODUCE, OR USE, OR DISCLOSE, IN WHOLE OR IN PART, ANY SUCH INFORMATION WITHOUT WRITTEN PERMISSION FROM HMD SEALLESS PUMPS LTD

GENERAL NOTES -
DIMENSIONS IN MILLIMETRES (mm)
CORNERS TO BE CHAMFERED 1 x 45° UNLESS OTHERWISE STATED
INTERNAL M/C RADII TO BE R0.8 UNLESS OTHERWISE STATED
REMOVE SHARP EDGES

TOLERANCES
UNLESS OTHERWISE STATED
DIMENSIONAL +/- 0.25
HOLES + 0.25 - 0.00
ANGULAR +/- 30'
SURFACE TEXTURE VALUES IN µm

FIRST USED ON 829251
SHT 1 OF 1
ORIGINAL SCALE 11

HMD KONTRO Sealless Pumps — Sundyne CORPORATION

TITLE ORIFICE PLATE
6mm THICK
WITH TAIL FOR ANSI FLANGES

DRG No C60018559
ISSUE 2
A2

Addendum:
General Arrangement Drawing

Document Reference No: EN207122-SNDYN-9V3-00013 / HMD-4505605360-B01-07

Tag No.: 18-P-257 A/S (840055-840056)

NACE compliance (MR-01-03 Not L or I)

Additional Information:

1. Service: Slop Oil Pump
2. Liquid Type /Name: Slop Oil
3. Operating Temperature: 100° F
4. Rated Flow: 6.7 gpm
5. Discharged Pressure: Rated 23.9 psig
6. Suction Pressure: Rated 4.9 psig / max 83 psig
7. Differential Pressure: 17.68 PSI
8. Differential Head: 45.6 ft Based on Performance test with orifice at discharge
9. Absorbed Power: 0.87 HP

Reference Documents:

1. Equipment Data sheet – EN207122-SNDYN-9V3-00122 / HMD-4505605360-C04-07
2. Cross Sectional Drawing & Parts List – EN207122-SNDYN-9V3-00012 / HMD-4505605360-D03-07
3. Coupling Assembly Drawing & Parts List - EN207122-SNDYN-9V3-00006 / HMD-4505605360-D03-01
4. Motor General Arrangements Drawing - EN207122-SNDYN-9V3-00158 / HMD-4505605360-B03-07
5. Motor Data Sheet - EN207122-SNDYN-9V3-000 / HMD-4505605360-C11-07